PowerFlex 750-Series AC Drives

Catalog Numbers 20F, 20G, 21G

Allen-Bradley
by ROCKWELL AUTOMATION

Installation Instructions

Original Instructions

Important User Information

Read this document and the documents listed in the additional resources section about installation, configuration, and operation of this equipment before you install, configure, operate, or maintain this product. Users are required to familiarize themselves with installation and wiring instructions in addition to requirements of all applicable codes, laws, and standards.

Activities including installation, adjustments, putting into service, use, assembly, disassembly, and maintenance are required to be carried out by suitably trained personnel in accordance with applicable code of practice.

If this equipment is used in a manner not specified by the manufacturer, the protection provided by the equipment may be impaired.

In no event will Rockwell Automation, Inc. be responsible or liable for indirect or consequential damages resulting from the use or application of this equipment.

The examples and diagrams in this manual are included solely for illustrative purposes. Because of the many variables and requirements associated with any particular installation, Rockwell Automation, Inc. cannot assume responsibility or liability for actual use based on the examples and diagrams.

No patent liability is assumed by Rockwell Automation, Inc. with respect to use of information, circuits, equipment, or software described in this manual.

Reproduction of the contents of this manual, in whole or in part, without written permission of Rockwell Automation, Inc., is prohibited.

Throughout this manual, when necessary, we use notes to make you aware of safety considerations.

WARNING: Identifies information about practices or circumstances that can cause an explosion in a hazardous environment, which may lead to personal injury or death, property damage, or economic loss.

ATTENTION: Identifies information about practices or circumstances that can lead to personal injury or death, property damage, or economic loss. Attentions help you identify a hazard, avoid a hazard, and recognize the consequence.

IMPORTANT Identifies information that is critical for successful application and understanding of the product.

These labels may also be on or inside the equipment to provide specific precautions.

SHOCK HAZARD: Labels may be on or inside the equipment, for example, a drive or motor, to alert people that dangerous voltage may be present.

BURN HAZARD: Labels may be on or inside the equipment, for example, a drive or motor, to alert people that surfaces may reach dangerous temperatures.

ARC FLASH HAZARD: Labels may be on or inside the equipment, for example, a motor control center, to alert people to potential Arc Flash. Arc Flash will cause severe injury or death. Wear proper Personal Protective Equipment (PPE). Follow ALL Regulatory requirements for safe work practices and for Personal Protective Equipment (PPE).

The following icon may appear in the text of this document.

Identifies information that is useful and can help to make a process easier to do or easier to understand.

Preface

Summary of Changes 7
Commonly Used Tools 7
Installation and Service Tools. 7
Line to Load Installation Guidelines 9
Additional Resources 11

Read the General Precautions

Chapter 1

Qualified Personnel 13
Personal Safety 13
Product Safety 14
Class 1 Light-emitting Diode Product. 14
Waste Electrical and Electronic Equipment. 14

Prepare for Installation

Chapter 2

Wall Mount Frames 1...7 Drive Rating Cross-references. 18
Floor Mount Frames 8...10 Drive Rating Cross-references 21
CE Conformity 22
Low Voltage Directive 22
EMC Directive. 22
General Considerations 22
Installation Requirements Related to EN 61800-5-1 and the Low Voltage Directive 23
Installation Requirements Related to EN 61800-3 and the EMC Directive. 24
Access Panels, Covers, and Doors 28
Minimum Clearances. 36
Mounting Considerations. 37
Wall Mount Frames 1...7. 37
Floor Mount Frames 8...10 37
All Mounting Styles and Frames 37
Environmental Specifications 37

Lift and Mount the Drive

Chapter 3

Drive Weights 39
Recommended Mounting Hardware. 40
Attach Lifting Hardware. 41
Enclosure Code F. 41
Enclosure Code N 42
Enclosure Code G 43
Open Type Drive (Removed from Cabinet) 43
Enclosure Codes B and L. 44
Enclosure Codes J, K, and Y 45
Release Floor Mount Drive Cabinet from Shipping Skid. 46

Remove Drive Cabinet Lifting Angle 47
Install IP20, NEMA/UL Type 1 Debris Screen, or Optional Exhaust Hood 48
Install IP54, NEMA 12 Cabinet Blower Assembly and Exhaust Hood 48
Install Floor Mount Drive with Cabinet Options Bay and Wiring Bay. 49
Position the Drive Cabinets and Cabinet Options Bay. 49
Position the Wiring Bay. 51
Join the Cabinets 54
Approximate Dimensions – Wall Mount Frames 1...7 and Floor Mount Frames 8...10 57
Approximate Dimensions – Floor Mount Drives with Cabinet Options 88
Release Drive Assembly from Cabinet. 124
Fiber-optic Cables. 127
Disconnect Drive Control Pod Wiring Connections 127
Disconnect Wire Connections – No Drive Control Pod 129
Disconnect Control and Power Wire Harnesses 131
AC Input Drives 131
Disconnect DC Bus Fuse Wire Harness. 131
AC Input Drives Floor Mount Frames 9 and Larger 131
Common DC Input Drives 132
Release Cabinet Options Assembly from Cabinet 133
Prepare the Roll-out Cart 135
Adjust Roll-out Cart Height Using Threaded Studs and Nuts. 137
Adjust Roll-out Cart Height Using Spacers 138
Adjust Roll-out Cart Reach 143
Remove Drive Assembly or Cabinet Options Assembly. 144
Drive Assembly – Floor Mount Frames 8...10. 147
Cabinet Options Assembly – Floor Mount Frames 9 and 10 . 148
Remove DC Back Bus Guard – Common DC Input Drives 150
Reinstall Drive Assembly or Cabinet Options Assembly 151

Chapter 4

Power Wiring

Grounding Requirements 153
Recommended Grounding Scheme 153
Shield Termination – SHLD 154
RFI Filter Grounding 154
Power Cable Types Acceptable for 200...600 Volt Installations. . . 155
Wire Recommendations 155
Motor Considerations 155
Terminal Block Specifications. 155
Three-phase Terminal Locations 157
Wall Mount Frames 1...7 AC Input Power Terminals 159

Wall Mount Frames 5...7 Common DC Input Terminal Locations 161
Wall Mount Frames 5...7 Common DC Input Power Terminals . 163
Floor Mount Frames 8...10 Bus Bar Locations 164
Floor Mount Cabinet Options Bay 167
Floor Mount Frames 8...10 Power Wiring Options 169
Floor Mount Frames 8...10 Power Terminal L-brackets 170
Additional Power Terminal L-Brackets. 170
Recommended Motor Cable Spacing – Floor Mount Frames 8 and Larger 172
Fuse and Circuit Breaker Ratings 175
Motor Overload Protection 196
Short Circuit Current Rating 196
Short Circuit Current Ratings – Floor Mount Drives with Cabinet Options 196
Input Contactor Precautions. 200
Output Contactor Precaution. 201
Bypass Contactor Precaution. 201
Applying and Removing Power. 201
Drives with Cabinet Options. 201
Power Disconnects 201
Contactors. 202
Reactors 202
Terminal Blocks and Other Cabinet Parts 202
Transformer Panel. 203
Power Wiring Schematic 203
Input Power Circuit Breakers and Disconnect Switches 204
Cabinet Options Bay Accessories 208
Drive Power Jumper Configuration. 219
MOV, AC EMI Capacitor, and Common Mode Capacitor Circuits. 219
Wall Mount Frames 2...5 Power Jumper Screw Removal and Storage 222
Wall Mount Frames 6 and 7 Power Jumper Wire Removal and Storage 223
Floor Mount Frames 8...10 Drive Assembly Jumper Removal and Storage 225

Chapter 5

I/O Wiring

I/O Terminal Blocks 228
Access Drive Control Pod. 229
PowerFlex 753 Main Control Board 233
PowerFlex 755 Main Control Board 236
Wall Mount Frames 1...7. 236
Floor Mount Frames 8...10 237
Hardware Enable Circuitry 238
Safety Enable Circuitry 240

PowerFlex 755 Fiber-optic Interface Board 241
AC Input Drive Control and Power Terminal Block 242
Shunt Trip Contact Operation 243
Common DC Input Drive Control and Power Terminal Blocks . 243
DC Precharge Board 244
Cabinet Door Interlock and Door Switch 244
120V Output Wiring for Drive Control 245
Control Transformer Connections – Common DC Input Drives 247
Uninterruptible Power Supply Connections – Common DC Input Drives 248
120/240V AC Power Supply Connections – Common DC Input Drives 249
PowerFlex 753 Main Control Board I/O Wiring Examples 250
Drive Device Ports 253
Option Module Wiring 254
Safe Torque Off Option Module 254
Integrated Safety - Safe Torque Off Option Module 254
Safe Speed Monitor Option Module 254
DeviceNet Option Module 255
ControlNet Option Module 256
Dual-port EtherNet/IP Option Module 257
PROFIBUS Option Module 258
BACnet/IP Option Module 259
20-COMM Carrier 260
Frame 1 Drives Installation Recommendations 260
Frame 2 and Larger Drives Installation Recommendations . . . 260
Motor Power Cables 261
Motor Feedback Wiring Examples 261
Control Pod Cable Routing 262
Floor Mount Frames 8...10 262
Control Wiring – Early Frame 8 Drives with Cabinet Options . . . 263
Control Wiring – Current Frame 8 Drives with Cabinet Options 265
Control Wiring – Frame 9 and 10 Drives with Cabinet Options 266
Enclosure Options – Floor Mount Frames 8...10 268
NEMA/UL Type 1 Enclosure – 2500 MCC Style Cabinet . . 268
NEMA Type 12 Enclosure – 2500 MCC Style Cabinet 268

Chapter 6

Integrated Motion Drives

Configure Option Modules for Integrated Motion 269
Supporting Documentation 270

Index 271

This document explains the basic steps for mechanical installation and for connecting incoming power, the motor, and basic I/O to the PowerFlex® 750-Series Adjustable Frequency AC drive.

IMPORTANT This information is intended for qualified installers of adjustable frequency AC drives.

See Additional Resources on page 11 for a list of Rockwell Automation publications that provide detailed drive information from wiring and grounding recommendations, to troubleshooting and repair.

Summary of Changes

This publication contains the following new or updated information. This list includes substantive updates only and is not intended to reflect all changes.

Topic	Page
Updated the grounding information for frame 1 products in the Installation Requirements Related to EN 61800-5-1 and the Low Voltage Directive section.	23
Updated the power jumper configuration "as shipped" from the factory information.	220
Updated the Recommended Power Jumper Configurations Wall Mount Frames 1…7 table to indicate that frame 1 drives must only be installed on a solidly center grounded system.	220
Removed the frame 1 drive power jumper configuration information from the Wall Mount Frames 6 and 7 Power Jumper Wire Removal and Storage section.	223
Removed the applicable I/O, feedback, and power option module installation and wiring information that is provided in the PowerFlex 750-Series I/O, Feedback, and Power Option Modules Installation Instructions, publication 750-IN111.	228 and 254
Removed the Safe Torque Off option module terminal designations and installation guidelines that are provided in the PowerFlex 750-Series Safe Torque Off User Manual, publication 750-UM002.	254
Removed the Integrated Safety - Safe Torque Off option module terminal designations and installation guidelines that are provided in the PowerFlex 755 Integrated Safety - Torque Off User Manual, publication 750-UM004.	254
Removed the Safe Speed Monitor option module terminal designations and installation guidelines that are provided in the PowerFlex 750-Series AC Drives Safety Reference Manual, publication 750-RM001.	254
Removed the motor feedback wiring examples and feedback device resolution information that are provided in the PowerFlex 750-Series I/O, Feedback, and Power Option Modules Installation Instructions, publication 750-IN111.	Chapter 5

Commonly Used Tools

Installation and Service Tools

IMPORTANT Do not let tools or hardware components fall into open drive assemblies. Do not energize the drive unless all tools and hardware components have been removed from the drive assemblies and enclosure.

Use these tools to install the drive.

Tool Description	Details
ESD-protected place of work	Work surface, Floor cover, seat, and ground connections
ESD-protective clothing	Wrist wrap, shoes, overall clothing (coat)
Multimeter	Digital multimeter, capable of AC and DC voltage, continuity, resistance, capacitance measurements, and forward diode bias tests. Fluke model 87 III or equivalent.

Tool Description	Details
Allen socket wrench	4 mm, 5 mm
Allen-socket wrench extension	254 mm (10 in.)
Flat-nose screwdriver	5 mm (0.19 in.), 6.4 mm (0.25 in.), 9.5 mm (0.375 in.), #1, #2
Hexalobular screw driver/bit	#15, #20, #25, #40, #45
Hexagonal socket wrench	7 mm, 8 mm, 10 mm, 12 mm, 13 mm, 17 mm, 18 mm
Combination wrench	10 mm, 17 mm
Phillips screw driver/bit	#2, 492-C
Pozidriv	#2, M3 x 7
Torque wrench	1...12 N•m (8.8…106 lb•in)
Torque wrench	6...50 N•m (53…443 lb•in)
Roll-out cart	20-750-CART1-F8 **IMPORTANT**: The roll-out cart is required to remove Frame 8 and larger drive assemblies from the enclosure.

Line to Load Installation Guidelines

This section provides direction for how and where to find information from line to load on the successful installation and implementation of PowerFlex 750-Series drives.

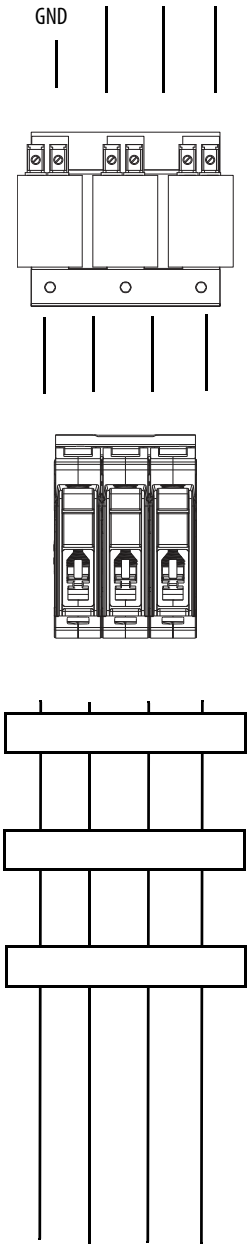

Topic	PowerFlex 750-Series Drives
AC supply source	Wiring and Grounding Guidelines for Pulse-width Modulated (PWM) AC Drives Installation Instructions, publication DRIVES-IN001 See Chapter 2 – System Configurations.
Input power conditioning	Wiring and Grounding Guidelines for Pulse-width Modulated (PWM) AC Drives Installation Instructions, publication DRIVES-IN001 See Chapter 2 – AC Line Impedance.
	1321 Power Conditioning Products Technical Data, publication 1321-TD001 See this publication for line reactors and isolation transformers.
Input fusing and circuit breakers	PowerFlex 750-Series AC Drives Installation Instructions, publication 750-IN001 See Fuse and Circuit Breaker Ratings on page 175.
Input power wire and cable	Wiring and Grounding Guidelines for Pulse-width Modulated (PWM) AC Drives Installation Instructions, publication DRIVES-IN001 See Chapter 1 – Input Power Cables.
EMC filters	PowerFlex 750-Series AC Drives Installation Instructions, publication 750-IN001 See Installation Requirements Related to EN 61800-3 and the EMC Directive on page 24.
Electrical interference	Wiring and Grounding Guidelines for Pulse-width Modulated (PWM) AC Drives Installation Instructions, publication DRIVES-IN001 See Chapter 6 – How Electromechanical Switches Cause Transient Interference.
Grounding	Wiring and Grounding Guidelines for Pulse-width Modulated (PWM) AC Drives Installation Instructions, publication DRIVES-IN001 See Chapter 3 – Grounding.
	PowerFlex 750-Series AC Drives Installation Instructions, publication 750-IN001 See Grounding Requirements on page 153.

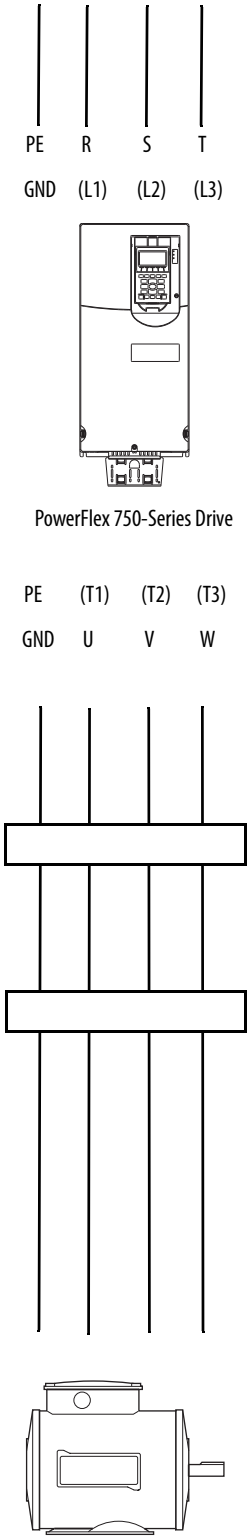

Topic	PowerFlex 750-Series Drives
Jumpers	PowerFlex 750-Series AC Drives Installation Instructions, publication 750-IN001 See Drive Power Jumper Configuration on page 219.
Mounting considerations	PowerFlex 750-Series AC Drives Installation Instructions, publication 750-IN001 See Minimum Clearances on page 38 and Mounting Considerations on page 39.
Environment	Industry Installation Guidelines for Pulse-width Modulated (PWM) AC Drives Application Technique, publication DRIVES-AT003 See this publication for information for different enclosure systems and environmental/location considerations (to help protect against environmental contaminants), and power and grounding considerations.
	PowerFlex 750-Series AC Drives Installation Instructions, publication 750-IN001 See Environmental Specifications on page 39.
Control and signal cabling	Wiring and Grounding Guidelines for Pulse-width Modulated (PWM) AC Drives Installation Instructions, publication DRIVES-IN001 See Chapter 4 – Wire Routing.
	PowerFlex 750-Series AC Drives Installation Instructions, publication 750-IN001 See I/O Wiring on page 231.
Output power cabling	Wiring and Grounding Guidelines for Pulse-width Modulated (PWM) AC Drives Installation Instructions, publication DRIVES-IN001 See Chapter 1 – Motor Cables.
Output devices	Wiring and Grounding Guidelines for Pulse-width Modulated (PWM) AC Drives Installation Instructions, publication DRIVES-IN001 See Chapter 6 – Shielded or Armored Power Cable.
	1321 Power Conditioning Products Technical Data, publication 1321-TD001 See this publication for load reactors, RWRs, and common mode chokes/cores.
	1204 Terminator Instructions, publication 1204-IN002 See this publication for motor terminators.
	PowerFlex 750-Series AC Drives Installation Instructions, publication 750-IN001 See Output Contactor Precaution on page 203.
Cable length	Wiring and Grounding Guidelines for Pulse-width Modulated (PWM) AC Drives Installation Instructions, publication DRIVES-IN001 See Chapter 5 – Length Restrictions for Motor Protection.
Encoder	Wiring and Grounding Guidelines for Pulse-width Modulated (PWM) AC Drives Installation Instructions, publication DRIVES-IN001 See Chapter 1 – Analog Signal and Encoder Cable.
Motor	Wiring and Grounding Guidelines for Pulse-width Modulated (PWM) AC Drives Installation Instructions, publication DRIVES-IN001 See Appendix A – Overview.

Additional Resources

These documents contain additional information concerning related products from Rockwell Automation. You can view or download publications at rok.auto/literature.

Resource	Description
Motor Protection Circuit Breaker and Motor Circuit Protector Specifications, publication 140-TD005	Provides product selection and specification information for Bulletin 140MP/MT motor protection circuit breakers and motor circuit protectors.
PowerFlex 750-Series AC Drives Programming Manual, publication 750-PM001	Provides detailed information on: • I/O, control, and feedback options • Parameters and programming • Faults, alarms, and troubleshooting
PowerFlex 750-Series AC Drives Technical Data, publication 750-TD001	Provides detailed information on: • Drive specifications • Option specifications • Fuse and circuit breaker ratings
PowerFlex 750-Series I/O, Feedback, and Power Option Modules, Installation Instructions, publication 750-IN111	Provides drive compatibility, jumper settings, terminal designations, wiring examples for analog and digital I/O, feedback, and auxiliary power options option modules.
PowerFlex 20-HIM-A6 / -C6S HIM (Human Interface Module) User Manual, publication 20HIM-UM001	Provides detailed information on HIM components, operation, features.
PowerFlex 750-Series AC Drives Hardware Service Manual – Frame 8 and Larger, publication 750-TG001	Provides detailed information on: • Preventive maintenance • Component testing • Hardware replacement procedures
PowerFlex 755 Drive Embedded EtherNet/IP™ Adapter User Manual, publication 750COM-UM001	These publications provide detailed information on how to configure, use, and troubleshoot PowerFlex 750-Series communication option modules and adapters.
PowerFlex 750-Series Drive DeviceNet Option Module User Manual, publication 750COM-UM002	
PowerFlex 7-Class Network Communication Adapter User Manuals, publications 750COM-UM*xxx*	
PowerFlex 750-Series Safe Torque Off User Manual, publication 750-UM002	These publications provide detailed information on how to install, configure, and operate the 750-Series safety option modules.
Safe Speed Monitor Option Module for PowerFlex 750-Series AC Drives Safety Reference Manual, publication 750-RM001	
Wiring and Grounding Guidelines for Pulse-width Modulated (PWM) AC Drives, publication DRIVES-IN001	Provides basic information to properly wire and ground PWM AC drives.
PowerFlex AC Drives in Common Bus Configurations, publication DRIVES-AT002	Provides basic information to properly wire and ground PWM AC drives with a common bus.
Safety Guidelines for the Application, Installation, and Maintenance of Solid-State Control, publication SGI-1.1	Provides general guidelines for the application, installation, and maintenance of solid-state control.
Product Certifications website, rok.auto/certifications	Provides declarations of conformity, certificates, and other certification details.

Notes:

Read the General Precautions

Qualified Personnel

ATTENTION: Only qualified personnel familiar with adjustable frequency AC drives and associated machinery can plan or implement the installation, start-up, and subsequent maintenance of the system. Failure to comply can result in personal injury and/or equipment damage.

Personal Safety

ATTENTION: To avoid an electric shock hazard, verify that the voltage on the bus capacitors has discharged completely before servicing.

Frames 1…7: Measure the DC bus voltage at the power terminal block by measuring between the +DC and -DC terminals (see Figure 95 and Figure 14 for location) or between the +DC and -DC test point sockets, if equipped. Also measure between the +DC terminal or test point and the chassis, and between the -DC terminal or testpoint and the chassis. The voltage must be zero for all three measurements.

Frames 8…10: Measure the DC bus voltage at the DC+ and DC- TESTPOINT sockets on the front of the power module (see Figure 98 for location).

ATTENTION: Hazard of personal injury or equipment damage exists when using bipolar input sources. Noise and drift in sensitive input circuits can cause unpredictable changes in motor speed and direction. Use speed command parameters to help reduce input source sensitivity.

ATTENTION: Risk of injury or equipment damage exists. DPI™ or SCANport™ host products must not be directly connected together via 1202 cables. Unpredictable behavior can result if two or more devices are connected in this manner.

ATTENTION: The drive start/stop/enable control circuitry includes solid-state components. If hazards due to accidental contact with moving machinery or unintentional flow of liquid, gas, or solids exist, an additional hardwired stop circuit can be required to remove the AC line to the drive. An auxiliary braking method can be required.

ATTENTION: Hazard of personal injury or equipment damage due to unexpected machine operation exists if the drive is configured to automatically issue a Start or Run command. Do not use these functions without considering applicable local, national, and international codes, standards, regulations, or industry guidelines.

Product Safety

ATTENTION: An incorrectly applied or installed drive can result in component damage or a reduction in product life. Wiring or application errors such as an under-size motor, incorrect or inadequate AC supply, a corrosive environment, or excessive surrounding air temperatures can result in malfunction of the system.

ATTENTION: This drive contains ESD (Electrostatic Discharge) sensitive parts and assemblies. Static control precautions are required when you install, test, service, or repair this assembly. Component damage can result if ESD control procedures are not followed. If you are not familiar with static control procedures, see an applicable ESD protection handbook.

ATTENTION: If you configure an analog input for 0 . . . 20 mA operation and drive it from a voltage source, you can cause component damage. Verify proper configuration before you apply any input signals.

Class 1 Light-emitting Diode Product

ATTENTION: Hazard of permanent eye damage exists when using optical transmission equipment. This product emits intense light and invisible radiation. Do not look into module ports or fiber-optic cable connectors.

Waste Electrical and Electronic Equipment

At the end of its life, this equipment should be collected separately from any unsorted municipal waste.

Prepare for Installation

Catalog Number Explanation.

1…3	4	5	6	7	8…10	11	12	13	14	15	16	17	18	
20G	1	A	N	D	248	A	A	0	N	N	N	N	N	LD - P3 - P11…
a	*b*	*c*	*d*	*e*	*f1…f6*	*g*	*h*	*i*	*Positions 14…18 are not used.*					

a

Drive		
Code	Type	Frames
20F	PowerFlex® 753	1…7
20G	PowerFlex 755	1…10
21G	PowerFlex 755 Drive with Options	8…10

b

Future Use

c

Input Type		
Code	Description	Frames
1	AC Input with Precharge, includes DC Terminals	1…5 8…10
4	DC Input with Precharge	5…10
A	AC Input with Precharge, no DC Terminals	6…8 (1)

(1) The DC Bus Bar kit (20-750-DCBB1-Fx) is available for Frames 6…7 AC input drives that require DC bus terminals.

d

Enclosure		
Code	Description	Frames
R	IP20, NEMA/UL Type Open, Frame 1	1
F (1)	Flange (NEMA/UL Type 4X/12 back)	2…5
G	IP54, NEMA/UL Type 12	2…7
N (2)	IP20/IP00, NEMA/UL Type Open	2…7
B (3)	IP20, NEMA/UL Type 1, 600 mm (23.6 in.) Deep, Standard Cabinet Color (RAL 7032)	8…10
J (3)	IP54, UL Type 12, 800 mm (31.5 in.) Deep, Standard Cabinet Color (RAL 7032)	8…10
K (3)	IP54, NEMA 12, 2500 MCC Style Cabinet and Options w/MCC Power Bus, 800 mm (31.5 in.) Deep, Standard Cabinet Color (RAL 7032)	8…10
L (3)	IP20, NEMA/UL Type 1, 800 mm (31.5 in.) Deep, Standard Cabinet Color (RAL 7032)	8…10
P (3)	IP20, NEMA/UL Type 1, 2500 MCC Style Cabinet and Options w/MCC Power Bus, 800 mm (31.5 in.) Deep, Standard Cabinet Color (RAL 7032)	8…10
W (3)	IP20, NEMA/UL Type 1, 2500 MCC Style Cabinet and Options w/MCC Power Bus, 800 mm (31.5 in.) Deep, CenterLine 2100 Gray (ASA49)	8…10
Y (3)	IP54, NEMA 12, 2500 MCC Style Cabinet and Options w/MCC Power Bus, 800 mm (31.5 in.) Deep, CenterLine 2100 Gray (ASA49)	8…10
T	IP00, UL Open Type without Control POD	8…10

(1) For Frames 6…7, a user installed flange kit (20-750-FLNG4-Fx) is available to convert a Code N drive that provides a NEMA/UL Type 4X/12 back.
(2) Frames 2…5 are IP20, Frames 6…7 are IP00.
(3) Available as a drive with options (21G).

e

Voltage Rating	
Code	Voltage
B	240V AC (208V AC) (1)/ 325V DC (281V DC) (1)
C	400V AC/540V DC
D	480V AC/650V DC
E	600V AC/810V DC
F	690V AC/932V DC (not UL Listed)

(1) Drive must be programmed to obtain low (208V AC) voltage rating.

f1

ND Rating 208V (1), 60 Hz Input								
Code	Amps	kW	Frame Enclosure Code					
			B, J, L, T	F	G	N	K, P, W, Y	R
2P2	2.5	0.37	–	–		–	–	1
4P2	4.8	0.75						
6P8	7.8	1.5						
9P6	11	2.2						
015	15.3	4						
2P2	2.5	0.37		2	2	2		–
4P2	4.8	0.75						
6P8	7.8	1.5						
9P6	11	2.2						
015	17.5	4						
022	22	5.5						
028	32.2	7.5		3	3	3		
042	43	11						
054	60	15		4	4	4		
070	78.2	18.2		5	5	5		
080	92	22			6			
104	120	30		(2)		6		
130	150	37						
154	177	45						
192	221	55						
260	260	66			7			
312	359	90		(2)		7		
360	414	110						
477	477	132						

(1) Drive must be programmed to obtain low (208VAC) voltage rating.
(2) For Frames 6 and 7, a user-installed flange kit (20-750-FLNG4-Fx) is available to convert a Code N drive that provides a NEMA/UL Type 4X/12 back.

f2

ND Rating 240V, 60 Hz Input								
Code	Amps	Hp	Frame Enclosure Code					
			B, J, L, T	F	G	N	K, P, W, Y	R
2P2	2.2	0.5	–	–	–	–	–	1
4P2	4.2	1						
6P8	6.8	2						
9P6	9.6	3						
015	15.3	5						
2P2	2.2	0.5		2	2	2		–
4P2	4.2	1						
6P8	6.8	2						
9P6	9.6	3						
015	15.3	5						
022	22	7.5						
028	28	10		3	3	3		
042	42	15						
054	54	20		4	4	4		
070	70	25		5	5	5		
080	80	30			6			
104	104	40		(1)		6		
130	130	50						
154	154	60						
192	192	75						
260	260	100			7			
312	312	125		(1)		7		
360	360	150						
477	477	200			–			

(1) For Frames 6 and 7, a user-installed flange kit (20-750-FLNG4-Fx) is available to convert a Code N drive that provides a NEMA/UL Type 4X/12 back.

Catalog Number Explanation (continued).

1…3	4	5	6	7	8…10	11	12	13	14	15	16	17	18	
20G	1	A	N	D	248	A	A	0	N	N	N	N	N	LD - P3 - P11…
a	*b*	*c*	*d*	*e*	*f1…f6*	*g*	*h*	*i*	*Positions 14…18 are not used.*					

f3

ND Rating								
400V, 50 Hz Input								
Code	Amps	kW	Frame					
			Enclosure Code					
			B, J, L, T	F	G	N	K, P, W, Y	R
2P1	2.1	0.75	–	2	2	2	–	1
3P5	3.5	1.5						
5P0	5.0	2.2						
8P7	8.7	4						
011	11.5	5.5						
015	15.4	7.5						
022	22	11						–
030	30	15		3	3	3		
037	37	18.5						
043	43	22						
060	60	30		4	4	4		
072	72	37			5			
085	85	45		5		5		
104	104	55			6			
140	140	75		(1)		6		
170	170	90						
205	205	110						
260	260	132			7			
302	302	160				7		
367	367	200						
456	456	250						
460	460	250	8	–	–	–	8(2)	
477	477	270	–	(1)	–	7	–	
540	540	315	8	–	–	–	8(2)	
567	567	315						
650	650	355						
750	750	400						
770	770	400						
910	910	500	9				9(2)	
1K0	1040	560						
1K1	1090	630						
1K2	1175	710						
1K4	1465	800						
1K5	1480	850						
1K6	1590	900	10				10(2)	
2K1	2150	1250						

(1) For Frames 6…7, a user installed flange kit (20-750-FLNG4-Fx) is available to convert a Code N drive that provides a NEMA/UL Type 4X/12 back.
(2) Available as a drive with options (21G).

f4

ND Rating								
480V, 60 Hz Input								
Code	Amps	Hp	Frame					
			Enclosure Code					
			B, J, L, T	F	G	N	K, P, W, Y	R
2P1	2.1	1	–	2	2	2	–	1
3P4	3.4	2						
5P0	5.0	3						
8P0	8.0	5						
011	11	7.5						
014	14	10						
022	22	15						–
027	27	20		3	3	3		
034	34	25						
040	40	30						
052	52	40		4	4	4		
065	65	50			5			
077	77	60		5		5		
096	96	75			6			
125	125	100		(1)		6		
156	156	125						
186	186	150						
248	248	200			7			
302	302	250				7		
361	361	300						
415	415	350						
430	430	350	8	–	–	–	8(2)	
477	477	400	–	(1)	–	7	–	
485	485	400	8	–	–	–	8(2)	
545	545	450						
617	617	500						
710	710	600						
740	740	650						
800	800	700	9				9(2)	
960	960	800						
1K0	1045	900						
1K2	1135	1000						
1K3	1365	1100						
1K4	1420	1250						
1K5	1525	1350	10				10(2)	
2K0	2070	1750						

(1) For Frames 6…7, a user installed flange kit (20-750-FLNG4-Fx) is available to convert a Code N drive that provides a NEMA/UL Type 4X/12 back.
(2) Available as a drive with options (21G).

f5

ND Rating								
600V, 60 Hz Input								
Code	Amps	Hp	Frame					
			Enclosure Code					
			B, J, L, T	F	G	N	K, P, W, Y	R
1P7	1.7	1	–	3	3	3	–	–
2P7	2.7	2						
3P9	3.9	3						
6P1	6.1	5						
9P0	9	7.5						
011	11	10						
012(1)	12	10		–	6	6		
017	17	15		3	3	3		
018(1)	18	15		–	6	6		
022	22	20		3	3	3		
023(1)	23	20		–	6	6		
024(1)	24	20						
027	27	25		4	4	4		
028(1)	28	25		–	6	6		
032	32	30		4	4	4		
033(1)	33	30		–	6	6		
041	41	40		5	5	5		
042(1)	42	40		–	6	6		
052	52	50		5	–	5		
053(1)	53	50		(2)	6	6		
063	63	60						
077	77	75						
099	99	100						
125	125	125						
144	144	150						
192	192	200			7	7		
242	242	250						
289	289	300						
295	295	300	8	–	–	–	8(3)	
355	355	350						
395	395	400						
435	435	450						
460	460	500						
510	510	500						
595	595	600	9				9(3)	
630	630	700						
760	760	800						
825	825	900						
900	900	950						
980	980	1000						
1K1	1110	1100	10				10(3)	
1K4	1430	1400						

(1) Required for uncontrolled common DC bus applications. Optional for all AC applications.
(2) For Frames 6…7, a user installed flange kit (20-750-FLNG4-Fx) is available to convert a Code N drive that provides a NEMA/UL Type 4X/12 back.
(3) Available as a drive with options (21G).

Catalog Number Explanation (continued).

1…3	4	5	6	7	8…10	11	12	13	14	15	16	17	18	
20G	1	A	N	D	248	A	A	0	N	N	N	N	N	LD - P3 - P11…
a	*b*	*c*	*d*	*e*	*f1…f6*	*g*	*h*	*i*	*Positions 14…18 are not used.*					

f6

ND Rating								
690V, 50 Hz Input (not UL Listed)								
Code	Amps	kW	Frame					
			Enclosure Code					
			B, J, L, T	F	G	N	K, P, W, Y	R
012	12	7.5	–	(1)	6	6	–	–
015	15	11						
020	20	15						
023	23	18.5						
030	30	22						
034	34	30						
046	46	37						
050	50	45						
061	61	55						
082	82	75						
098	98	90						
119	119	110						
142	142	132						
171	171	160			7	7		
212	212	200						
263	263	250						
265	265	250	8		–	–	8(2)	
330	330	315						
370	370	355						
415	415	400						
460	460	450						
500	500	500						
590	590	560	9	–			9(2)	
650	650	630						
710	710	710						
765	765	750						
795	795	800						
960	960	900						
1K0	1040	1000	10				10(2)	
1K4	1400	1400						

(1) For Frames 6…7, a user installed flange kit (20-750-FLNG4-F*x*) is available to convert a Code N drive that provides a NEMA/UL Type 4X/12 back.
(2) Available as a drive with options (21G).

g

Filtering and CM Cap Configuration		
Code	Filtering	Default CM Cap Connection
A	Yes	Jumper Removed
J	Yes	Jumper Installed

h

Dynamic Braking(1)		
Code	Internal Resistor(2)	Internal Transistor(3)
A	No	Yes
N	No	No

(1) Not available on Frames 8…10, specify Code 'N'.
(2) Frames 1…2 only. Internal Resistor kits (20-750-DB1-Dx) sold separately.
(3) Standard on Frames 1…5, optional on 6…7.

i

Door Mounted HIM (Frames 8…10)	
Code	Operator Interface
0	No Door Mounted HIM
2	Enhanced LCD, Full Numeric, IP20
4	Enhanced LCD, Full Numeric, IP66 NEMA Type 4X/12

PowerFlex 755 w/Options (21G) Required Selections

Code	Option	Frames	Type
LD	Light Duty	8…10	System Overload Duty Cycle(1)
ND	Normal Duty		
HD	Heavy Duty		
P3	Input Thermal- magnetic Circuit Breaker	8…10	Power Disconnect(1)
P5	Input Non-Fused Molded Case Disconnect Switch	8 Only	
P14	Wiring Only Bay	8…10	Wiring Only Bay

(1) Only one option of this type can be selected.

PowerFlex 755 w/Options (21G) Additional Selections

Code	Option	Frames	Type
P11	Input Contactor	8 Only	Contactors(1)(2)
P12	Output Contactor		
L1	3% Input Reactor	8…9	Reactors(1)
L2	3% Output Reactor		
L3	5% Input Reactor	8 Only	
L4	5% Output Reactor		
P20	1200 A Bus	8…10	MCC Power Bus Capacity(1)
P22	2000 A Bus		
P24	3000 A Bus		
P30	UPS Control Bus, DC Input w/Precharge only	8…10	UPS Control Bus
X1	Auxiliary Transformer (500VA available), IP20 Cabinet Only	8 Only(3)	Auxiliary Power

(1) Only one option of this type can be selected.
(2) Contactor options are not available for systems with MCC power bus.
(3) Standard on all other cabinet configurations.

Wall Mount Frames 1…7 Drive Rating Cross-references

Reference the drive nameplate with Table 1, Table 2, or Table 3 to determine the drive rating for your wall mount drive.

Drive Nameplate 1, Wall Mount Frames 1…7

Table 1 - Drive Rating Cross-reference for 208V and 240V Drives

Drive Code	2	1				
	Input Voltage and Normal Duty Amp Rating	Enclosure Code				
	208V/240V AC	F	G	N	R	
20F or 20G	B2P2	2	2	2	1	Wall Mount Frame
20F or 20G	B4P2					
20F or 20G	B6P8					
20F or 20G	B9P6					
20F or 20G	B015					
20F or 20G	B022				–	
20F or 20G	B028	3	3	3		
20F or 20G	B042					
20F or 20G	B054	4	4	4		
20F or 20G	B070	5	5	5		
20F or 20G	B080		6			
20F or 20G	B104	6 (Kit)		6		
20F or 20G	B130					
20F or 20G	B154					
20F or 20G	B192					
20F or 20G	B260		7			
20F or 20G	B312	7 (Kit)		7		
20F or 20G	B360					
20F or 20G	B477		–			

Drive Nameplate 1, Wall Mount Frames 1…7

Table 2 - Drive Rating Cross-reference for 400V and 480V Drives

Drive Code	2		1				
	Input Voltage and Normal Duty Amp Rating		Enclosure Code				
	400V AC	480V AC	F	G	N	R	
20F or 20G	C2P1	D2P1	2	2	2	1	Wall Mount Frame
20F or 20G	C3P5	D3P4					
20F or 20G	C5P0	D5P0					
20F or 20G	C8P7	D8P0					
20F or 20G	C011	D011					
20F or 20G	C015	D014					
20F or 20G	C022	D022				–	
20F or 20G	C030	D027	3	3	3		
20F or 20G	C037	D034					
20F or 20G	C043	D040					
20F or 20G	C060	D052	4	4	4		
20F or 20G	C072	D065		5			
20F or 20G	C085	D077	5		5		
20F or 20G	C104	D096		6			
20F or 20G	C140	D125	6 (Kit)		6		
20F or 20G	C170	D156					
20F or 20G	C205	D186					
20F or 20G	C260	D248		7			
20F or 20G	C302	D302	7 (Kit)		7		
20F or 20G	C367	D361					
20F or 20G	C456	D415					
20F or 20G	C477	D477		–			

Drive Nameplate 1, Wall Mount Frames 1…7

Table 3 - Drive Rating Cross-reference for 600V and 690V Wall Mount Drives

Drive Code	2		1				
	Input Voltage and Normal Duty Amp Rating		Enclosure Code				
	600V AC	690V AC	F	G	N	R	
20F or 20G	E1P7	–	3	3	3	–	Wall Mount Frame
20F or 20G	E2P7						
20F or 20G	E3P9						
20F or 20G	E6P1						
20F or 20G	E9P0						
20F or 20G	E011						
20F or 20G	E012	F012	6 (Kit)	6	6		
20F or 20G	E017	–	3	3	3		
20F or 20G	E018	F015	6 (Kit)	6	6		
20F or 20G	E022	–	3	3	3		
20F or 20G	E023	F020	6 (Kit)	6	6		
20F or 20G	E024	F023					
20F or 20G	E027	–	4	4	4		
20F or 20G	E028	F030	6 (Kit)	6	6		
20F or 20G	E032	–	4	4	4		
20F or 20G	E033	F034	6 (Kit)	6	6		
20F or 20G	E041	–	5	5	5		
20F or 20G	E042	F046	6 (Kit)	6	6		
20F or 20G	E052	–	5	–	5		
20F or 20G	E053	F050	6 (Kit)	6	6		
20F or 20G	E063	F061					
20F or 20G	E077	F082					
20F or 20G	E099	F098					
20F or 20G	E125	F119					
20F or 20G	E144	F142					
20F or 20G	E192	F171	7 (Kit)	7	7		
20F or 20G	E242	F212					
20F or 20G	E289	F263					

Floor Mount Frames 8…10 Drive Rating Cross-references

Reference the drive nameplate with Table 4 to determine the drive rating for your floor mount drive.

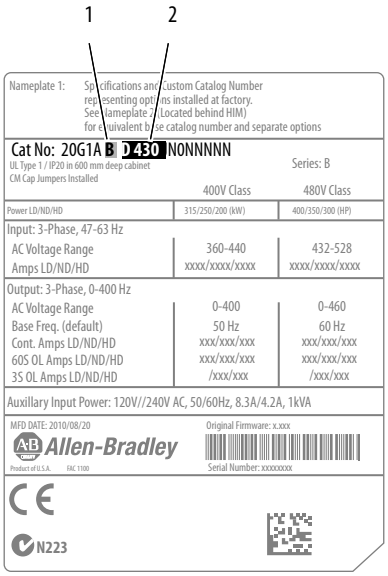

Drive Nameplate 1, Floor Mount Frames 8…10

Table 4 - Drive Rating Cross-reference for 400V, 480V, 600V, and 690V Floor Mount Drives

Drive Code	2				1				
	Input Voltage and Normal Duty Amp Rating				Enclosure Code				
	400V AC	480V AC	600V AC	690V AC	B	L, J	P, K	W, Y	
20G or 21G	C460	D430	E295	F265	8	8	8	8	Floor Mount Frame
20G or 21G	C540	D485	E355	F330					
20G or 21G	C567	D545	E395	F370					
20G or 21G	C650	D617	E435	F415					
20G or 21G	C750	D710	E460	F460					
20G or 21G	C770	D740	E510	F500					
20G or 21G	C910	D800	E595	F590	9	9	9	9	
20G or 21G	C1K0	D960	E630	F650					
20G or 21G	C1K1	D1K0	E760	F710					
20G or 21G	C1K2	D1K2	E825	F765					
20G or 21G	C1K4	D1K3	E900	F795					
20G or 21G	C1K5	D1K4	E980	F960					
20G or 21G	C1K6	D1K5	E1K1	F1K0	10	10	10	10	
20G or 21G	C2K1	D2K0	E1K4	F1K4					

CE Conformity

Compliance with the Low Voltage Directive and Electromagnetic Compatibility Directive has been demonstrated using harmonized European Norm (EN) standards, which are referenced by the Official Journal of the European Union. PowerFlex 750-Series drives comply with the EN standards that are listed in this section when installed according to these installation instructions.

EU Declarations of Conformity are available online at rok.auto/certifications.

Low Voltage Directive

EN 61800-5-1 Adjustable speed electrical power drive systems –Part 5-1: Safety requirements – Electrical, thermal and energy.

EMC Directive

EN 61800-3 Adjustable speed electrical power drive systems – Part 3: EMC product standard including specific test methods.

General Considerations

This section lists additional items to consider to meet CE conformity:

- For EU compliance, drives must satisfy installation requirements that are related to both EN 61800-5-1 and EN 61800-3 provided in this document.
- PowerFlex 750-Series AC Drives comply with the EMC requirements of EN 61800-3 when installed according to good EMC practices and the instructions that are provided in this document. However, many factors can influence the EMC compliance of an entire machine or installation, and compliance of the drive itself does not mean compliance of all applications.
- PowerFlex 750-Series drives are not intended to be used on public low-voltage networks that supply domestic premises. Without additional mitigation, radio frequency interference is expected if used on such a network. The installer is responsible to take measures such as supplementary line filters and enclosures to help prevent interference, and the installation requirements of this document.

ATTENTION: NEMA/UL Open Type and flange mount drives must be installed in a supplementary enclosure, or be equipped with a NEMA Type 1 Kit to be CE-compliant regarding protection against electrical shock.

- Requirements for supplementary mitigation that is related to specific high-frequency emission limits are provided in Table 5 on page 26.

- PowerFlex 750-Series drives generate harmonic current emissions on the AC supply system. When operated on a public low-voltage network it is the responsibility of the installer or user to verify that applicable requirements of the distribution network operator have been met. Consultation with the network operator and Rockwell Automation can be necessary.

ATTENTION: PowerFlex 750-Series drives produce DC current in the protective earthing conductor that can reduce the ability of RCDs (residual current-operated protective devices) or RCMs (residual current-operated monitoring devices) of type A or AC to provide protection for other equipment in the installation. Where an RCD or RCM is used for protection from direct or indirect contact, only an RCD or RCM of Type B is allowed on the supply side of this product.

Installation Requirements Related to EN 61800-5-1 and the Low Voltage Directive

This section lists installation requirements that are related to EN 61800-5-1 and the Low Voltage Directive.

Frame 1 Drives

Voltage classes up to 480V PowerFlex 750-Series Frame 1 drives can only be used on a solidly center grounded supply system for altitudes up to and including 2000 m (6562 ft).

Frame 2 and Larger Drives

Voltage classes up to 690V, PowerFlex 750-Series Frame 2 and larger drives, are compliant with the CE LV Directive when used on a 'corner-earthed' supply system, and all other common supply systems, for altitudes up to and including 2000 m (6562 ft).

When used at altitudes above 2000 m (6562 ft) up to a maximum of 4800 m (15,748 ft), PowerFlex 750-Series drives of voltage classes up to 480V cannot be powered from a 'corner-earthed' supply system to maintain compliance with the CE LV Directive. Altitude derating curves are provided in the PowerFlex 750-Series AC Drives Technical Data, publication 750-TD001.

All Drive Frames

Drives that are provided in the IP54, NEMA/UL Type 12 enclosure are compliant with the CE LV Directive when installed in pollution degree 1...4 environments. All other enclosure types must be installed in a pollution degree 1 or 2 environment to be compliant with the CE LV Directive.

Characteristics of the different pollution degree ratings are provided in the PowerFlex 750-Series AC Drives Technical Data, publication 750-TD001.

PowerFlex 750-Series drives produce leakage current in the protective earthing conductor that exceeds 3.5 mA AC and/or 10 mA DC. The minimum size of the protective earthing (grounding) conductor that is used in the application must comply with local safety regulations for high-protective earthing conductor current equipment.

ATTENTION: PowerFlex 750-Series drives produce DC current in the protective earthing conductor which can reduce the ability of RCDs (residual current-operated protective devices) or RCMs (residual current-operated monitoring devices) of type A or AC to provide protection for other equipment in the installation. Where an RCD or RCM is used for protection from direct or indirect contact, only an RCD or RCM of Type B is allowed on the supply side of this product.

ATTENTION: To avoid an electric shock hazard, confirm that the 120V AC and 240V AC control I/O meets the requirements of overvoltage category II and is supplied with an isolation transformer from the mains power.

Installation Requirements Related to EN 61800-3 and the EMC Directive

This section lists installation requirements that are related to EN 61800-3 and the EMC Directive:

- The drive must be earthed (grounded) as described in Power Wiring on page 153.
- Output power wiring to the motor must use cable with a braided shield that provides 75% or greater coverage, or the cables must be housed in metal conduit, or equivalent shielding must be provided. Continuous shielding must be provided from the drive enclosure to the motor enclosure. Both ends of the motor cable shield (or conduit) must terminate with a low-impedance connection to earth.

  Wall Mount Drive Frames 1...7: At the drive end of the motor cable, either

– The cable shield must be clamped to a properly installed 'EMC plate' for the drive. Kit catalog number 20-750-EMC*x*-F*x* (where F*x* is the frame size of the drive). See PowerFlex 750-Series EMC Plate and Core(s) – Frames 1...7, publication 750-IN006, for details.

or

– The cable shield or conduit must terminate in a shielded connector that is installed in a conduit plate or conduit box that is provided in the "NEMA Type 1 Kit" for the drive. Kit catalog number 20-750-NEMA1-F*x* (where *x* is the frame size of the drive). See PowerFlex 750-Series NEMA/UL Type 1 Kits – Frames 1...7, publication 750-IN008, for details.

Floor Mount Drive Frames 8 and larger: At the drive end of the motor cable, terminate the shield at the PE grounding bar (see Floor Mount Frames 8...10 Bus Bar Locations on page 164).

- At the motor end, the motor cable shield or conduit must terminate in a shielded connector that must be properly installed in an earthed motor wiring box that is attached to the motor. The motor wiring box cover must be installed and earthed.
- All control (I/O) and signal wiring to the drive must use cable with a braided shield that provides 75% or greater coverage, or the cables must be housed in metal conduit, or equivalent shielding must be provided. When shielded cable is used, the cable shield is terminated with a low-impedance connection to earth at only one end of the cable, preferably the end where the receiver is located. When the cable shield is terminated at the drive end, it can be terminated by using a shielded connector with a conduit plate or conduit box, or the shield can be clamped to an 'EMC plate'.
- Motor cables must be separated from control and signal wiring wherever possible.
- Maximum motor-cable length must not exceed the maximum length that is shown in Table 5 on page 26 for compliance with radio-frequency emission limits for the specific standard and installation environment.
- EMC cores must be applied to input power and motor cables for some models of the PowerFlex 750-Series drives as indicated in Table 5 on page 26.
- The drive must be powered from an earthed supply system such as a TN or TT system and the PE-A and PE-B jumpers in the drive must be installed (see Drive Power Jumper Configuration on page 219).
- IP00 and NEMA/UL Open Type Frame 8 and higher frames must be installed in suitable supplementary EMC enclosures to achieve compliance with EN 61800-3.

Table 5 - PowerFlex 750-Series 208V/240V and 400V/480V Input Drives RF Emission Compliance and Installation Requirements

	Standard and Limits			
Drive Frame Catalog Number	**EN 61800-3 Category C1 EN 61000-6-3 CISPR11 Group 1 Class B**	**EN 61800-3 Category C2 EN 61000-6-4 CISPR11 Group 1 Class A (Input Power ≤ 20 kVA)**	**EN 61800-3 Category C3 (I ≤ 100 A) CISPR11 Group 1 Class A (Input Power > 20 kVA)**	**EN 61800-3 Category C3 I > 100 A**
Wall Mount Frame 1 20F11*xx*2P1…20F11*xx*015 20G11*xx*2P1…20G11*xx*015	N/A	30 m (98.4 ft) motor cable limit with each wire looped once around an input core. (1) (2)	30 m (98.4 ft) motor cable limit with each wire looped once around an input core. (1)	N/A
Wall Mount Frame 2 20F11*xx*2P1…20F11*xx*022 20G11*xx*2P1…20G11*xx*022	150 m (492.1 ft) cable limit with Schaffner FN3258-30-*nn* filter. Supplementary EMC enclosure is required to provide attenuation of radiated emissions.	30 m (98.4 ft) motor cable limit with input core. (1) 150 m (492.1 ft) motor cable limit with Schaffner FN3258-30-*nn* filter.	30 m (98.4 ft) motor cable limit with input core. (1) 150 m (492.1 ft) motor cable limit with Schaffner FN3258-30-*nn* filter.	N/A
Wall Mount Frame 3 20F11*xx*028…20F11*xx*043 20G11*xx*028…20G11*xx*043	150 m (492.1 ft) cable limit with Schaffner FN3258-55-*nn* filter. Supplementary EMC enclosure is required to provide attenuation of radiated emissions.	30 m (98.4 ft) motor cable limit with input core. (1) 150 m (492.1 ft) motor cable limit with Schaffner FN3258-55-*nn* filter.	30 m (98.4 ft) motor cable limit with input core. (1) 150 m (492.1 ft) motor cable limit with Schaffner FN3258-55-*nn* filter.	N/A
Wall Mount Frame 4 20F11*xx*054…20F11*xx*072 20G11*xx*054…20G11*xx*072	150 m (492.1 ft) cable limit with Schaffner FN3258-75-*nn* filter. Supplementary EMC enclosure is required to provide attenuation of radiated emissions.	30 m (98.4 ft) motor cable limit with input and output cores. (1) 150 m (492.1 ft) motor cable limit with Schaffner FN3258-75-*nn* filter.	30 m (98.4 ft) motor cable limit with input and output cores. (1) 150 m (492.1 ft) motor cable limit with Schaffner FN3258-75-*nn* filter.	N/A
Wall Mount Frame 5 20F11*xx*070…20F11*xx*104 20G11*xx*070…20G11*xx*104	150 m (492.1 ft) cable limit with Schaffner FN3258-130-*nn* filter. Supplementary EMC enclosure is required to provide attenuation of radiated emissions.	30 m (98.4 ft) motor cable limit with input and output cores. (1) 150 m (492.1 ft) motor cable limit with Schaffner FN3258-130-*nn* filter.	30 m (98.4 ft) motor cable limit with input and output cores. (1) 150 m (492.1 ft) motor cable limit with Schaffner FN3258-130-*nn* filter.	30 m (98.4 ft) motor cable limit with input and output cores. (1) 150 m (492.1 ft) motor cable limit with Schaffner FN3258-130-*nn* filter.
Wall Mount Frame 6 20F11*xx*80…20F11*xx*260 20G11*xx*80…20G11*xx*260	150 m (492.1 ft) cable limit with 22-RFD323 filter. Supplementary EMC enclosure is required to provide attenuation of radiated emissions.	100 m (328.1 ft) motor cable limit with Schaffner FN3359-320-*nn* filter. 150 m (492.1 ft) motor cable limit with 22-RFD323 filter. Supplementary EMC enclosure is required to provide attenuation of radiated emissions.	30 m (98.4 ft) motor cable limit with no filter. (3) 100 m (328.1 ft) motor cable limit with Schaffner FN3359-320-*nn* filter. 150 m (492.1 ft) motor cable limit with 22-RFD323 filter.	30 m (98.4 ft) motor cable limit with no filter. (3) 100 m (328.1 ft) motor cable limit with Schaffner FN3359-320-*nn* filter. 150 m (492.1 ft) motor cable limit with 22-RFD323 filter.
Wall Mount Frame 7 20F11*xx*248…20F11*xx*477 20G11*xx*248…20G11*xx*477	150 m (492.1 ft) cable limit with 22-RFD480 filter. Supplementary EMC enclosure is required to provide attenuation of radiated emissions.	150 m (492.1 ft) motor cable limit with Schaffner FN3359-600-*nn* filter. 150 m (492.1 ft) motor cable limit with 22-RFD480 filter. Supplementary EMC enclosure is required to provide attenuation of radiated emissions.	30 m (98.4 ft) motor cable limit with no filter. (3) 150 m (492.1 ft) motor cable limit with Schaffner FN3359-600-*nn* filter. 150 m (492.1 ft) motor cable limit with 22-RFD480 filter.	30 m (98.4 ft) motor cable limit with no filter. (3) 150 m (492.1 ft) motor cable limit with Schaffner FN3359-600-*nn* filter. 150 m (492.1 ft) motor cable limit with 22-RFD480 filter.
Floor Mount Frame 8 – AC Input 20G1A*xx*460…20G1A*xx*770 21G1A*xx*460…21G1A*xx*770	Compliance possible with supplementary mitigation (consult factory)	Compliance possible with supplementary mitigation (consult factory)	30 m (98.4 ft) motor cable limit (3) with output core. (4)	30 m (98.4 ft) motor cable limit (3) with output core. (4)
Floor Mount Frame 9 – AC Input 20G11*xx*910…20G11*xx*1K5 21G11*xx*910…21G11*xx*1K5	Compliance possible with supplementary mitigation (consult factory)	Compliance possible with supplementary mitigation (consult factory)	30 m (98.4 ft) motor cable limit (3) with output core(4) and input core.	30 m (98.4 ft) motor cable limit (3) with output core(4) and input core.
Floor Mount Frame 10 – AC Input 20G11*xx*1K6…20G11*xx*2K1 21G11*xx*1K6…21G11*xx*2K1	Compliance possible with supplementary mitigation (consult factory)	Compliance possible with supplementary mitigation (consult factory)	30 m (98.4 ft) motor cable limit (3) with output core(4) and input core. With door shielding kit installed.(5)	30 m (98.4 ft) motor cable limit (3) with output core(4) and input core. With door shielding kit installed.(5)
Floor Mount Frames 8…9 – Common DC Input 20G14*xx*460…20G14*xx*1K5 21G14*xx*460…21G14*xx*1K5	Compliance possible with supplementary mitigation (consult factory)	Compliance possible with supplementary mitigation (consult factory)	30 m (98.4 ft) motor cable limit (3) with output core(4) and input core.(6)	30 m (98.4 ft) motor cable limit (3) with output core(4) and input core.(6)
Floor Mount Frame 10 – Common DC Input 20G14*xx*1K6…20G14*xx*2K1 21G14*xx*1K6…21G14*xx*2K1	Compliance possible with supplementary mitigation (consult factory)	Compliance possible with supplementary mitigation (consult factory)	30 m (98.4 ft) motor cable limit (3) with output core(4) and input core.(6) With door shielding kit installed.(5)	30 m (98.4 ft) motor cable limit (3) with output core(4) and input core. With door shielding kit installed.(5)
	More Stringent Limits ←		→	Less Stringent Limits

(1) Rating-specific EMC cores are part of EMC kit numbers 20-750-EMC1-*nn* and 20-750-EMC2-*nn*.

(2) To meet the C2 rating with a Dual Encoder module installed, Frame 1 drives must be installed in a supplementary EMC enclosure to attenuate radiated emissions.

(3) Intended to be powered from an industrial power network that is supplied by a dedicated power transformer or generator and not from LV power lines that supply other customers.

(4) EMC kit number 20-750-EMCCM1-F8. Kit contains one core. Each drive assembly requires one EMC kit. Order one kit for a Frame 8 drive, two kits for a Frame 9 drive, three kits for a Frame 10 drive.

(5) Door-shielding kit number 20-750-EMCDK1-F10. Kit contains shield brackets for three doors.

(6) EMC kit number 20-750-CBPEMCCM1-F8. Kit contains one core. Each drive assembly requires one EMC kit. Order one kit for a Frame 8 drive, two kits for a Frame 9 drive, three kits for a Frame 10 drive.

Table 6 - PowerFlex 750-Series 600V/690V Input Drives RF Emission Compliance and Installation Requirements

Drive Frame Catalog Number	Standard and Limits			
	EN 61800-3 Category C1 EN 61000-6-3 CISPR11 Group 1 Class B	**EN 61800-3 Category C2 EN 61000-6-4 CISPR11 Group 1 Class A (Input Power ≤ 20 kVA)**	**EN 61800-3 Category C3 (I ≤ 100 A) CISPR11 Group 1 Class A (Input Power > 20 kVA)**	**EN 61800-3 Category C3 I > 100 A**
Wall Mount Frame 3: 600V (3 Hp and higher.) 20F11*x*E3P9…20F11*x*E022 20G11*x*E3P9…20G11*x*E022	50 m (164 ft) cable limit with Schaffner FN258HV-42-33 filter. Supplementary EMC enclosure is required to provide attenuation of radiated emissions.	30 m (98.4 ft) motor cable limit with one input and one output core.(1)	30 m (98.4 ft) motor cable limit with one input and one output core.(1)	N/A
Wall Mount Frame 4: 600V 20F11*x*E027…20F11*x*E032 20G11*x*E027…20G11*x*E032	50 m (164 ft) cable limit with Schaffner FN258HV-55-34 filter. Supplementary EMC enclosure is required to provide attenuation of radiated emissions.	30 m (98.4 ft) motor cable limit with one input and one output core.(1)	30 m (98.4 ft) motor cable limit with one input and one output core.(1)	N/A
Wall Mount Frame 5: 600V 20F11*x*E041…20F11*x*E052 20G11*x*E041…20G11*x*E052	50 m (164 ft) cable limit with Schaffner FN258HV-100-35 filter. Supplementary EMC enclosure is required to provide attenuation of radiated emissions.	30 m (98.4 ft) motor cable limit with one input and one output core.(1)	30 m (98.4 ft) motor cable limit with one input and one output core.(1)	N/A
Wall Mount Frame 6: 600V/690V 20F11*xx*012…20F11*xx*144 20G11*xx*012…20G11*xx*144	50 m (164 ft) cable limit with Schaffner FN258HV-100-35 filter (up to 90 kW drives) or FN3359HV-250-28 filter (110 kW and larger drives). Supplementary EMC enclosure is required to provide attenuation of radiated emissions.	50 m (164 ft) cable limit with Schaffner FN258HV-100-35 filter (up to 90 kW drives) or FN3359HV-250-28 filter (110 kW and larger drives). Supplementary EMC enclosure is required to provide attenuation of radiated emissions.	30 m (98.4 ft) motor cable limit with one input and one output core.(1)	30 m (98.4 ft) motor cable limit with one input and one output core.(1)
Frame 7: 600V/690V 20F11*xx*192…20F11*xx*289 20G11*xx*192…20G11*xx*289	50 m (164 ft) cable limit with Schaffner FN3359HV-400-99 filter. Supplementary EMC enclosure is required to provide attenuation of radiated emissions.	50 m (164 ft) cable limit with Schaffner FN3359HV-400-99 filter. Supplementary EMC enclosure is required to provide attenuation of radiated emissions.	30 m (98.4 ft) motor cable limit with one input and one output core.(1)	30 m (98.4 ft) motor cable limit with one input and one output core.(1)
	More Stringent Limits ←		→	Less Stringent Limits

(1) Rating-specific EMC cores are part of EMC kit numbers 20-750-EMC3-*nn* and 20-750-EMC4-*nn*.

Access Panels, Covers, and Doors

This section provides descriptions for how to remove and replace access panels, covers, and doors on different drive sizes and enclosures.

Figure 1 - Enclosure Code R (IP20, NEMA/UL Open Type) Wall Mount, Frame 1

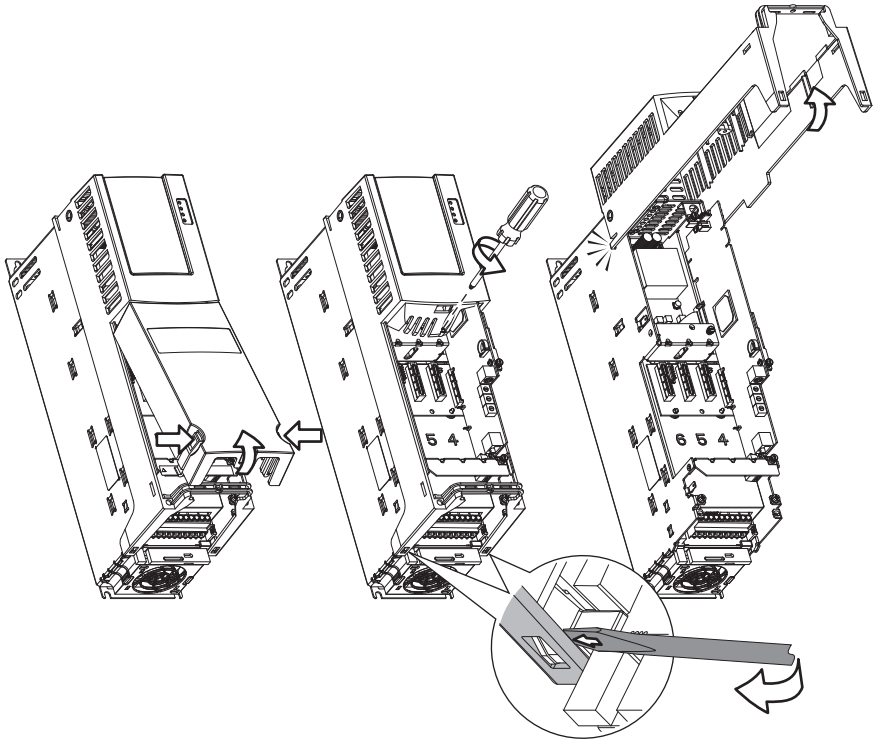

Figure 2 - Enclosure Code N (IP20, NEMA/UL Open Type) Wall Mount, Frames 2…5

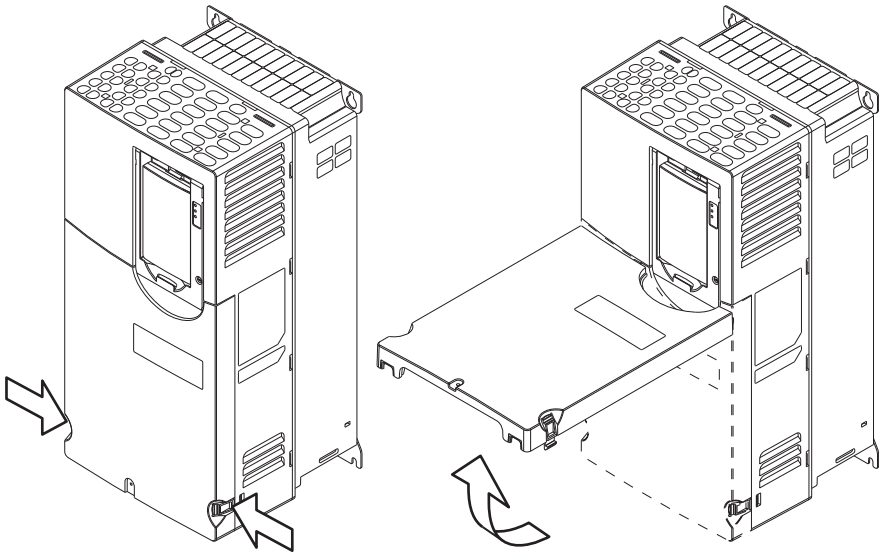

Figure 3 - Enclosure Code G (IP54, NEMA/UL Type 12) Wall Mount, Frames 2…5

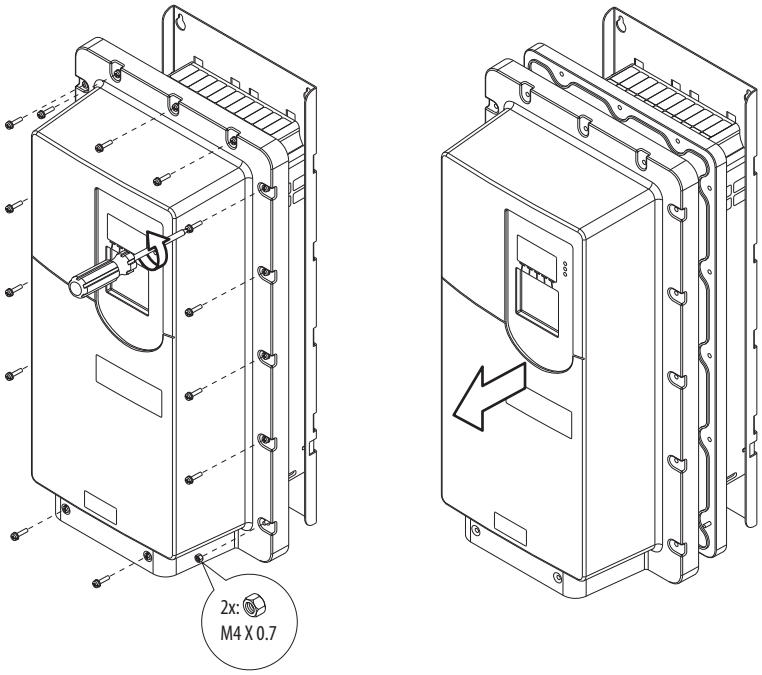

To remove or replace the cover, use these tools and torque:

- Recommended torque (screws and nuts) = 0.68 N•m (6.0 lb•in)
- Recommended screwdriver = 6.4 mm (0.25 in.) flat or T20 Hexalobular
- Recommended hex socket = 7 mm

Figure 4 - Enclosure Code N (IP00, NEMA/UL Open Type) Wall Mount, Frames 6 and 7

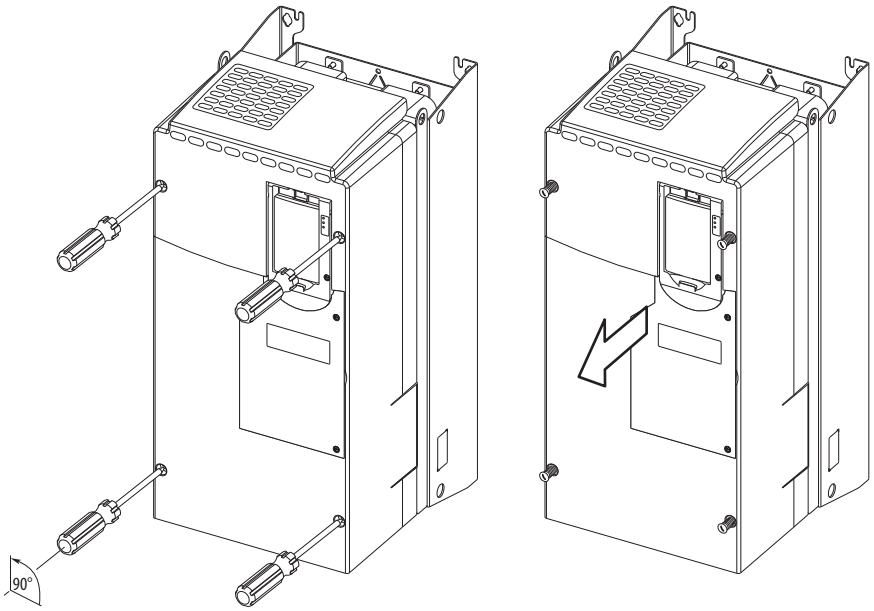

To remove or replace the cover, use this tool:

- Recommended screwdriver = 9.5 mm (0.375 in.) flat

Figure 5 - Enclosure Code N (IP00, NEMA/UL Open Type) Wall Mount, Frames 6 and 7 Access Door

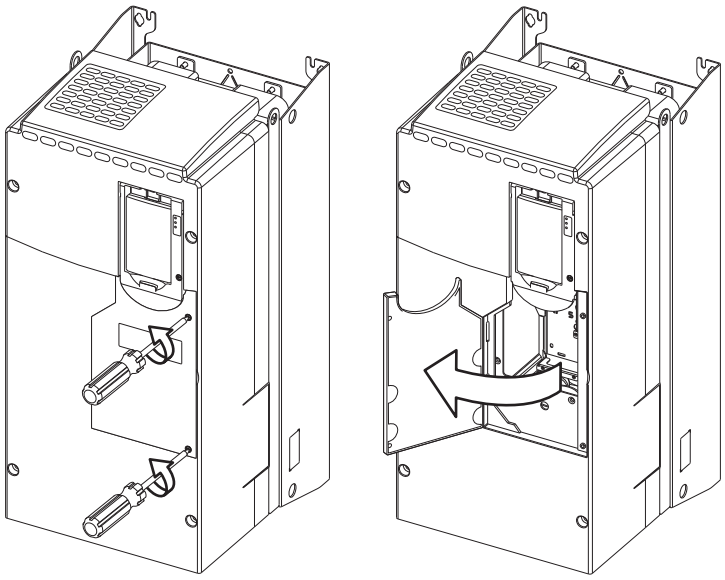

To open or secure the access door, use this tool:

- Recommended screwdriver = 6.4 mm (0.25 in.) flat or T20 Hexalobular

Figure 6 - Floor Mount Frames 8 and Larger Cabinet Access Door (all enclosure types)

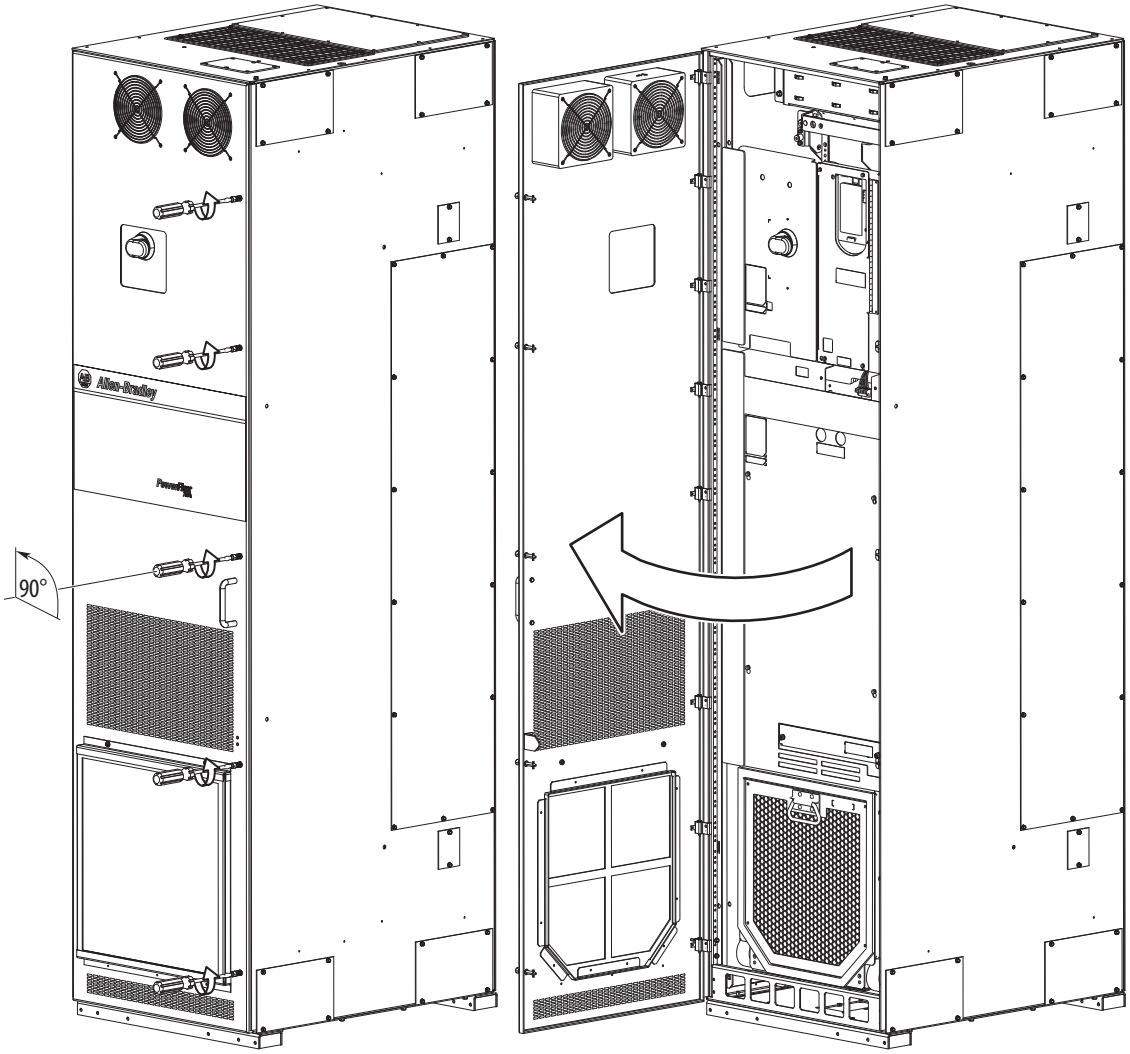

To open or secure the access door, use this tool:

- Recommended screwdriver = 9.5 mm (0.375 in.) flat

Figure 7 - Floor Mount Drive-assembly Access Panels – All Enclosure Types (IP20, NEMA/UL Type 1 shown)

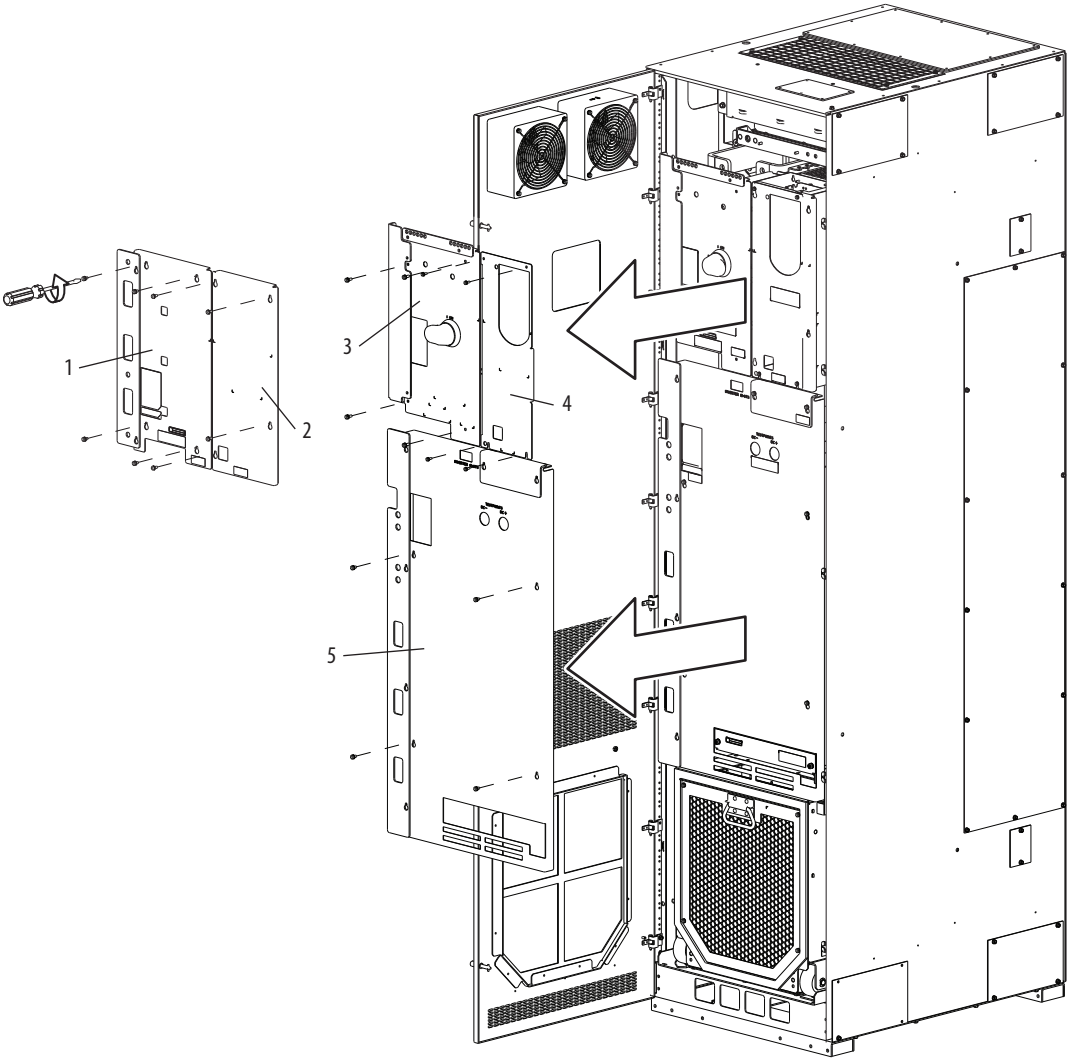

No.	Description
1	Left front converter cover with side shield (AC input drives)
2	Right front converter cover (no control pod)
3	Left front converter cover with side shield (common DC input drives)
4	Right front converter cover (with control pod)
5	Inverter front cover with side shield (common DC input drives)

To remove or replace the covers, use this tool and torque:

- Recommended torque = 2.8 N•m (25.0 lb•in)
- Recommended screwdriver = 6.4 mm (0.25 in.) flat or T25 Hexalobular

Figure 8 - Floor Mount Cabinet Options Bay Access Door

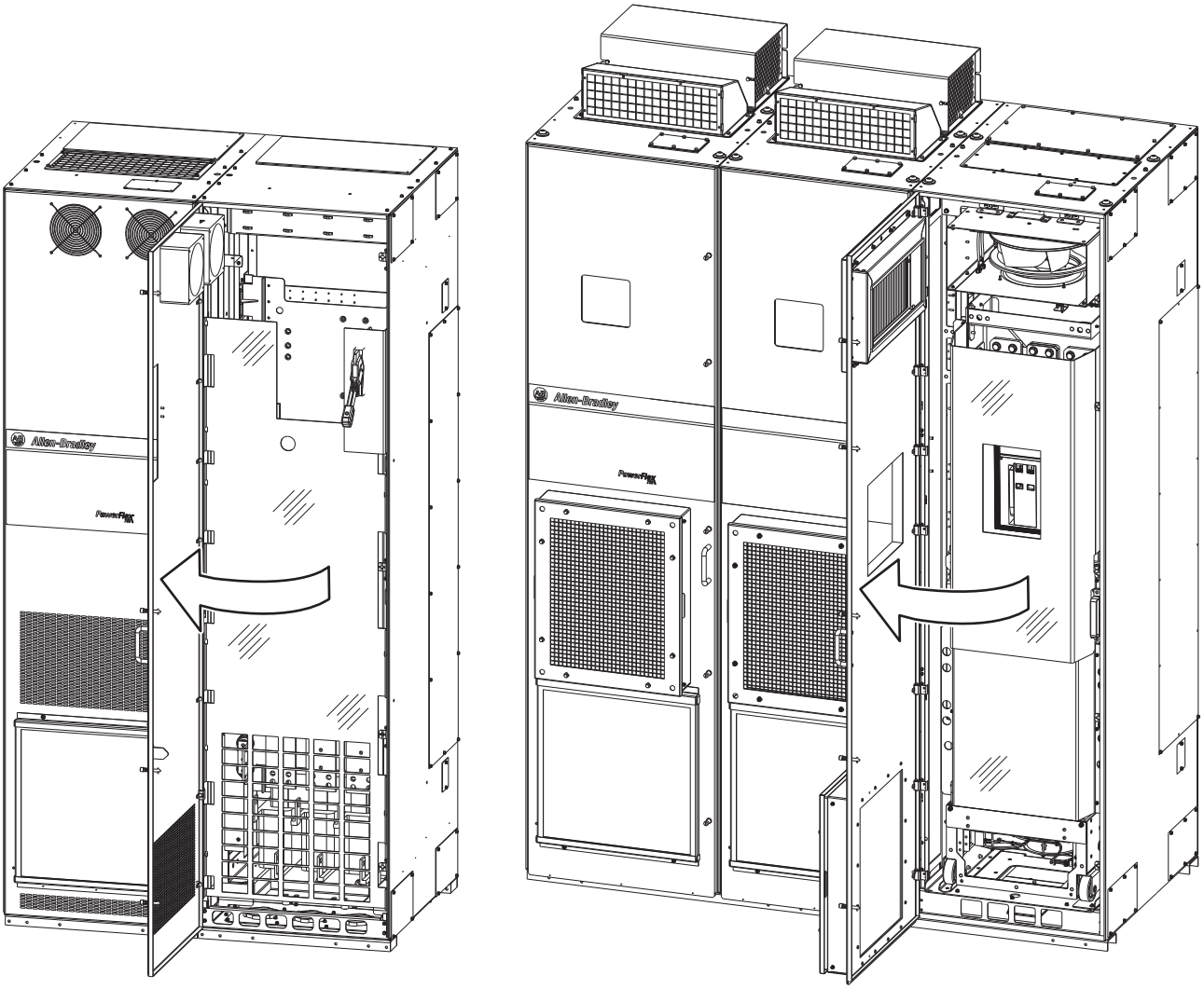

Floor Mount Frame 8 – IP20, NEMA/UL Type 1

Floor Mount Frame 9 – IP54, NEMA 12

To open or secure the access door, use this tool:

- Recommended screwdriver = 9.5 mm (0.375 in.) flat

Figure 9 - Full Cabinet Options Bay Guard – Floor Mount Frame 8

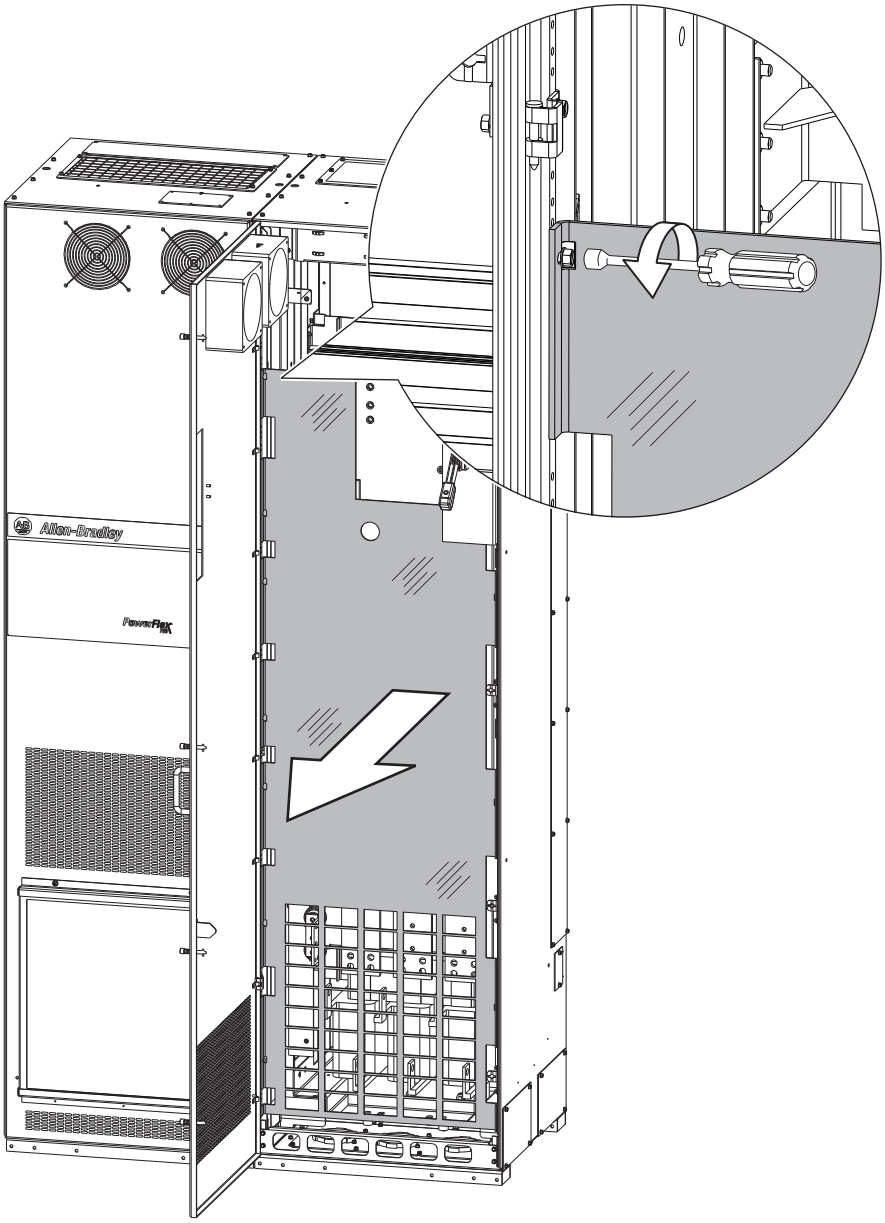

To remove the full bay guard, loosen the ten M5 screws. You do not need to remove these screws.

To remove or replace the full bay guard, use this tool and torque:

- Recommended torque = 2.8 N•m (25.0 lb•in)
- Recommended driver = 8 mm Hexagonal socket

Figure 10 - Full Cabinet Options Bay Guard Floor Mount Frame 9

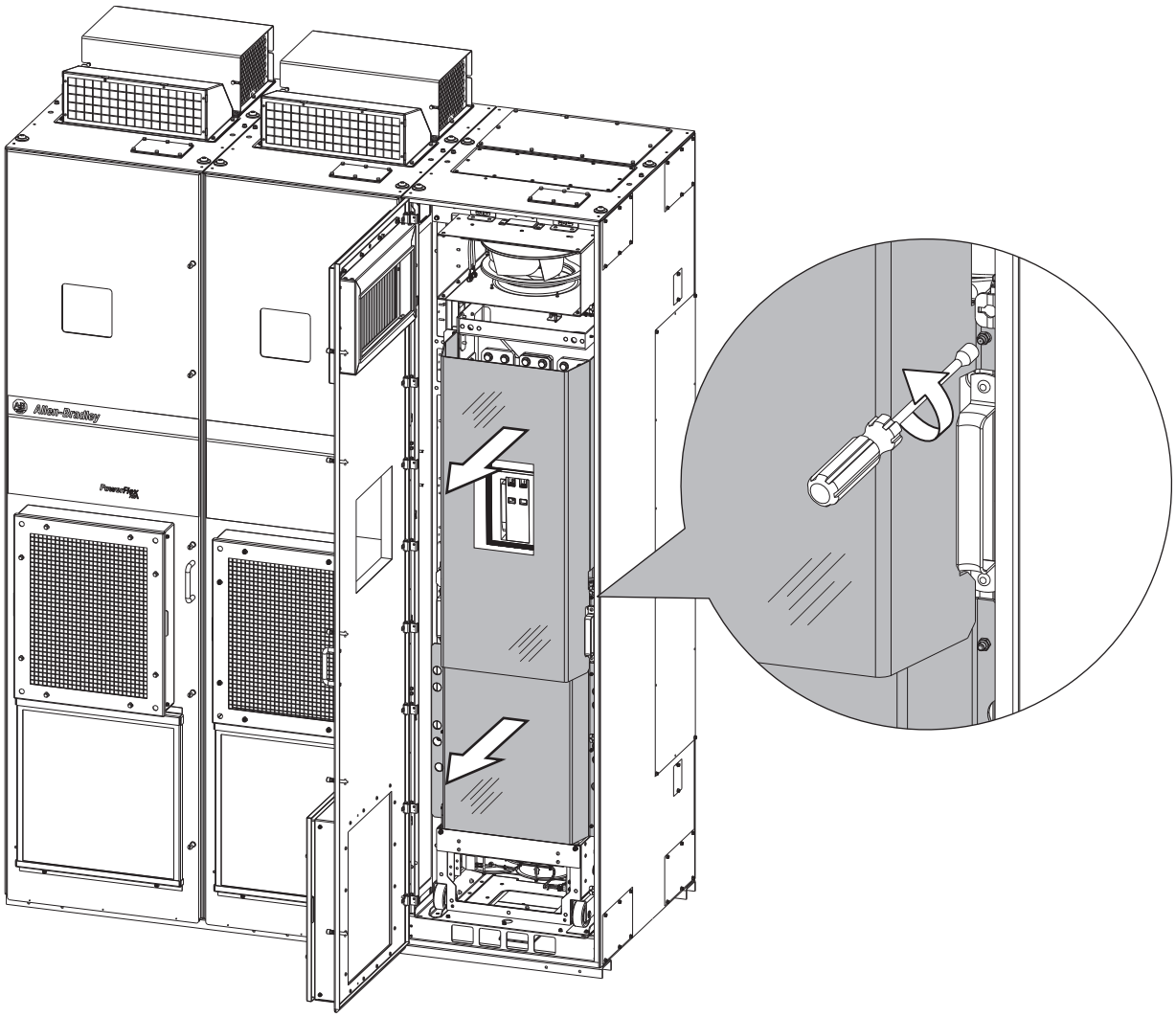

To remove the full bay guard, loosen the ten M5 screws. You do not need to remove these screws. It is not necessary to remove the guard to roll out the cabinet options assembly or to install input power cabling.

To remove or replace the full bay guard, use this tool and torque:

- Recommended torque = 2.8 N•m (25.0 lb•in)
- Recommended driver = 8 mm Hexagonal socket

Minimum Clearances

Specified vertical clearance requirements (indicated in Figure 11 and Figure 12) are intended to be from the drive to the closest object that can restrict airflow through the drive heat sink and chassis. The drive must be mounted in a vertical orientation as shown and must make full contact with the mounting surface. Do not use standoffs or spacers. In addition, inlet air temperature must not exceed the product specification.

Figure 11 - Minimum Mounting Clearances – Wall Mount, Frames 1…7

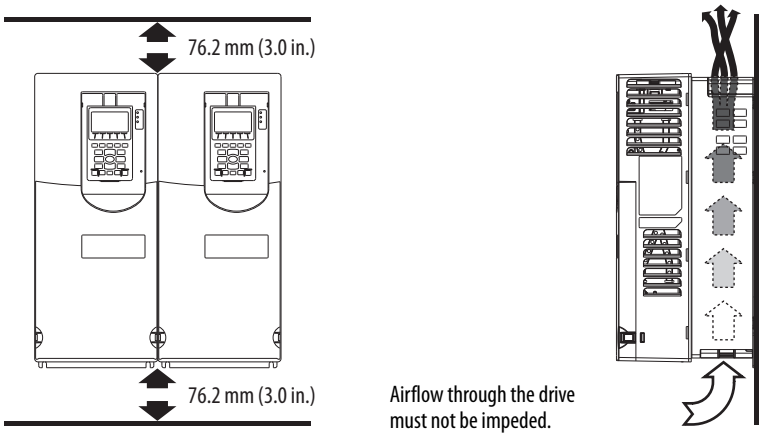

Figure 12 - Minimum Mounting Clearances – Floor Mount Drive Cabinets

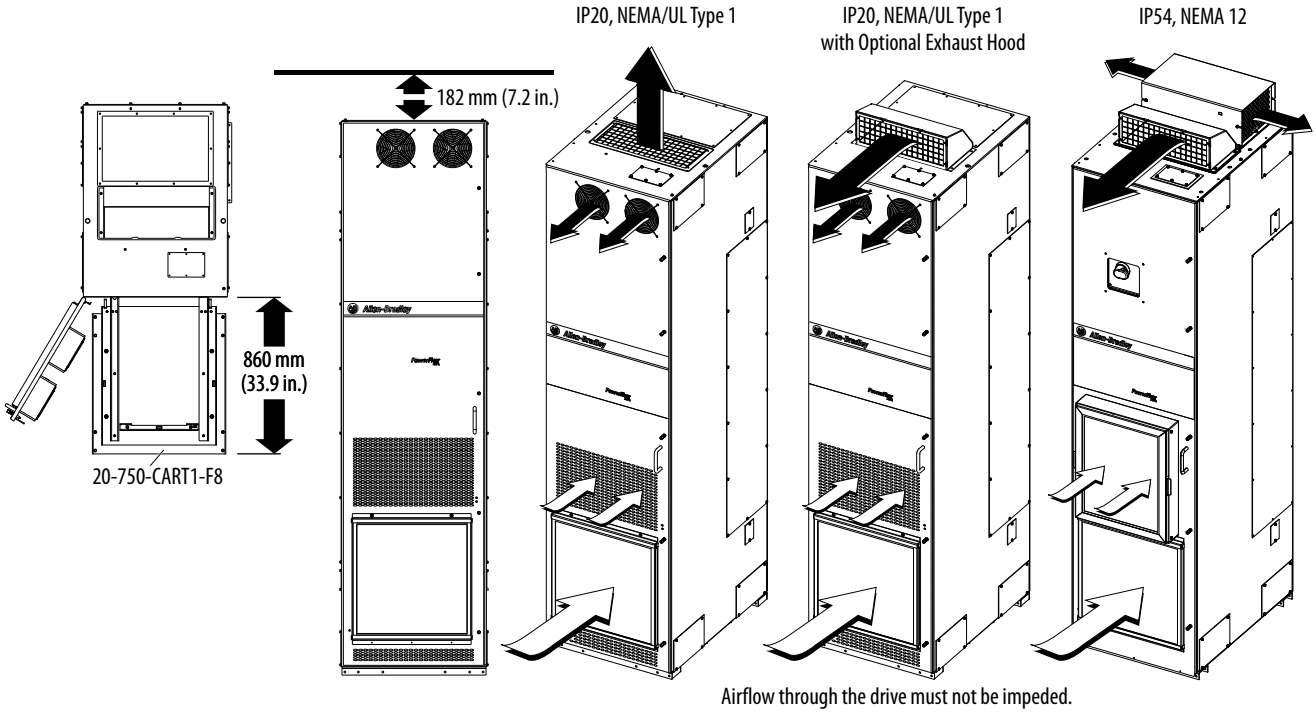

Mounting Considerations

This section provides guidelines for mounting the drives.

Wall Mount Frames 1…7

For wall mount Frames 1...7, follow these guidelines:

- Mount the drive upright on a flat, vertical, and level surface.
- Verify that the drive is in full contact with the mounting surface as depicted in Figure 11.

Floor Mount Frames 8…10

For floor mount Frames 8...10, follow these guidelines:

- Install the drive upright on a flat and level surface.
- Verify that the drive cabinet is square, vertical, and stable.
- Verify that the filter and debris screens are installed.

All Mounting Styles and Frames

For all drives, follow these guidelines:

- Protect the cooling fan by avoiding dust or metallic particles.
- Do not expose to a corrosive atmosphere.
- Protect from moisture and direct sunlight (unless rated for outdoor use).

Environmental Specifications

Maximum surrounding air temperature		
IP20, NEMA/UL Open Type	0…50 °C (32…122 °F)	Wall mount Frames 1…5, all ratings
IP00, NEMA/UL Open Type	0…50 °C (32…122 °F)	Wall mount Frames 6 and 7, 12…456 A ratings
	0…40 °C (32…104 °F)	Wall mount Frame 7, 477 A ratings
IP20, NEMA/UL Type 1 (with hood)	0…40 °C (32…104 °F)	Wall mount Frames 1…5, all ratings
IP20, NEMA/UL Type 1 (with label)	0…40 °C (32…104 °F)	Wall mount Frames 6…7, all ratings
IP20, NEMA/UL Type 1 (MCC cabinet)	0…40 °C (32…104 °F)	Floor mount Frames 8…10, all ratings
IP54, NEMA 12 (MCC cabinet)	0…40 °C (32…104 °F)	Floor mount Frames 8…10, all ratings
Flange mount		
Front		
IP20, NEMA/UL Open Type	0…50 °C (32…122 °F)	Wall mount Frames 2…5, all ratings
IP00, NEMA/UL Open Type	0…50 °C (32…122 °F)	Wall mount Frames 6 and 7, 12…456 A ratings
	0…40 °C (32…104 °F)	Wall mount Frame 7, 477 A ratings
Back/Heat sink		
IP66, NEMA/UL Type 4X	0…40 °C (32…104 °F)	Wall mount Frames 2…7, all ratings
Stand-alone/Wall mount		
IP54, NEMA/UL Type 12	0…40 °C (32…104 °F)	Wall mount Frames 2…7, all ratings
Storage temperature (all drives)	-40…+70 °C (-40…+158 °F)	
Atmosphere	**IMPORTANT**: Do not install the drive in an area where the ambient atmosphere contains volatile or corrosive gas, vapors, or dust. If the drive is not going to be immediately installed, it must be stored in an area where it is not exposed to a corrosive atmosphere.	

Notes:

Lift and Mount the Drive

Drive Weights

All lifting equipment and components (hooks, bolts, lifts, slings, chains, and so on) must be properly sized and rated to safely lift and hold the weight of the drive.

ATTENTION: To guard against possible personal injury and/or equipment damage, follow these guidelines:

- Inspect all lifting hardware for proper attachment before you lift the drive.
- Do not allow any part of the drive or lift mechanism to contact electrically charged conductors or components.
- Do not subject the drive to high rates of acceleration or deceleration while transporting to the mounting location or when lifting.
- Do not allow personnel or their limbs directly underneath the drive when it is being lifted and mounted.

Table 7 - Approximate Drive Weights – Wall Mount Frames 1…7 and Floor Mount Frames 8…10

Drive		Frame Size	Drive Rating		Enclosure Code/Weight, kg (lb)			
			kW (208V, 400V, 690V)(1)	Hp (240V, 480V, 600V)(1)	F	G	N	R
Standard (20F, 20G)	AC input and common DC input	1	0.37…7.5	0.5…10				6 (13)
		2	0.37…11	0.5…15	8 (17)	8 (17)	8 (17)	
		3	7.5…22	0.5…30	12 (26)	12 (26)	12 (26)	
		4	15…37	20…50	14 (30)	14 (30)	14 (30)	
		5	18.5…55	25…70	20 (45)	20 (45)	20 (45)	
		6	5.5…75	7.5…100	37 (82)	89 (197)	37 (82)	
			45…132	50…200	38 (84)	91 (200)	39 (85)	
		7	132…200	150…300	69 (152)	135 (297)	79 (174)	
			200…270	300…400	96 (212)	162 (357)	106 (234)	
					B, L	**P, W**	**J**	**K, Y**
Standard (20G)	AC input	8	250…400	350…650	623 (1374)	1145 (2525)	644 (1419)	1166 (2570)
		9	500…850	700…1250	1246 (2748)	2290 (5051)	1287 (2838)	2332 (5141)
		10	900…1250	1350…1750	1869 (4122)	3435 (7576)	1931 (4257)	3498 (7711)
	Common DC input	8	250…400	350…650	566 (1248)	1088 (2400)	586 (1293)	1109 (2445)
		9	500…850	700…1250	1132 (2497)	2176 (4799)	1173 (2587)	2218 (4889)
		10	900…1250	1350…1750	1698 (3745)	3264 (7199)	1760 (3880)	3327 (7334)
With options (21G)	AC input	8	250…400	350…650	1145 (2525)	1675 (3694)	1166 (2570)	1696 (3739)
		9	500…850	700…1250	1730 (3815)	2820 (6219)	1771 (3905)	2862 (6309)
		10	900…1250	1350…1750	2315 (5106)	3965 (8745)	2377 (5241)	4028 (8880)

(1) Only frame 1…7 available for 208V, 240V input drives.

Table 8 - Maximum Component Weights – Floor Mount Frames 8…10

Component	Weight, kg (lb)	
	AC Input	Common DC Input
Converter/DC input with precharge	64 (140)	64 (140)
Inverter	222 (490)	165 (363)
Drive assembly (Open, IP00)	286 (630)	229 (504)
Cabinet options assembly with circuit breaker and reactor	296 (653)	–

Recommended Mounting Hardware

Use the recommended hardware to mount the drives.

Frame Size		Fastener Size	Notes
Wall mount	1	M6 (#10 or #12)	
	2		
	3		
	4		
	5		
	6	M6 (#12)	
	7	M8 (5/16 in.)	
Floor mount	8	M12 (1/2 in.)	Property class 8.8 (min)
	9		
	10		

IMPORTANT Mounting hardware is included with enclosure type F (flange mount) drives. To meet the enclosure rating, you must use the hardware that is included with the flange mount drives.

Attach Lifting Hardware

This section provides guidelines on how to attach the lifting hardware.

Figure 13 - Rigging Geometry

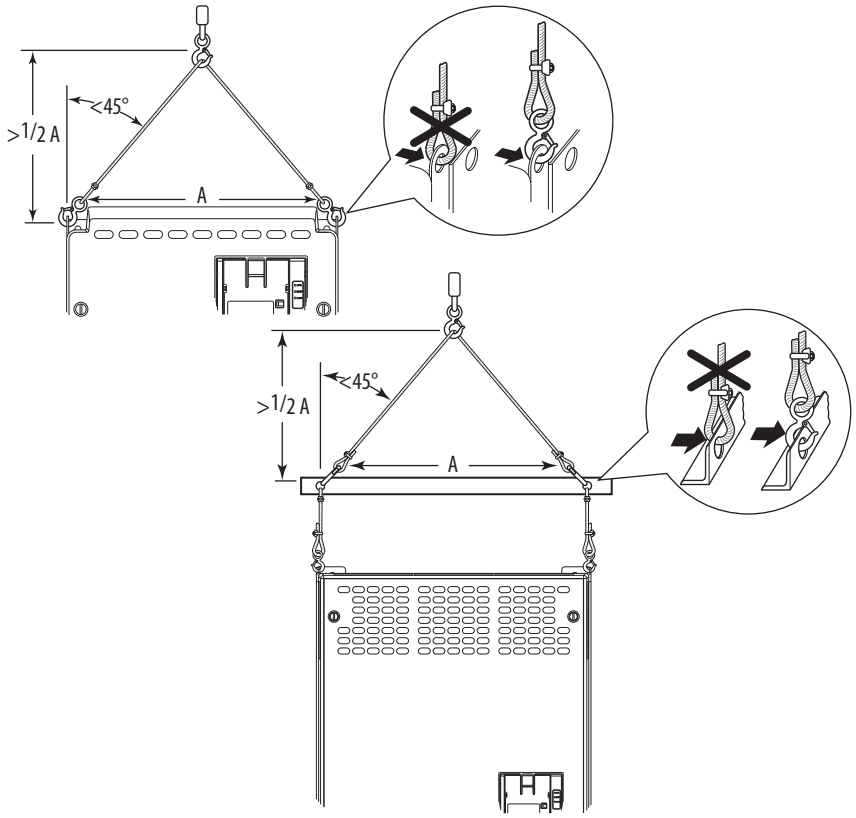

Enclosure Code F

Follow these guidelines for drives with enclosure code F.

Figure 14 - Wall Mount Frame 6 Lifting Points – Two Places

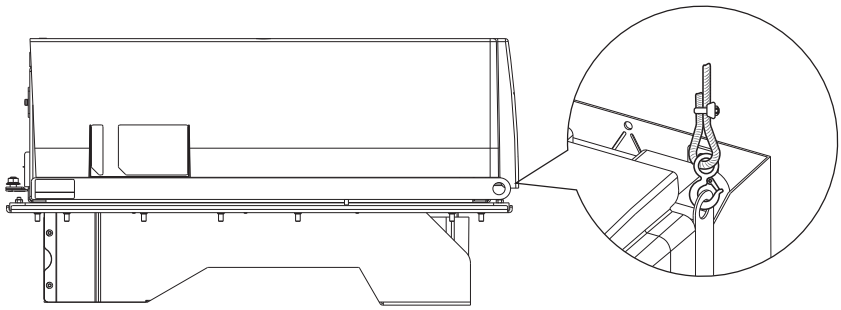

Figure 15 - Wall Mount Frame 7 Lifting Points – Four Places

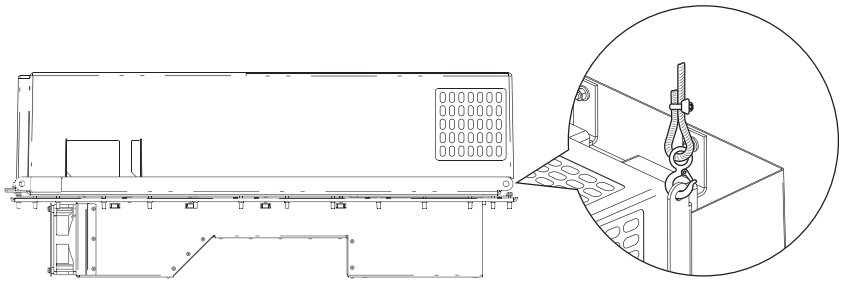

Enclosure Code N

Follow these guidelines for drives with enclosure code N.

Figure 16 - Wall Mount Frame 6 Lifting Points – Six Places

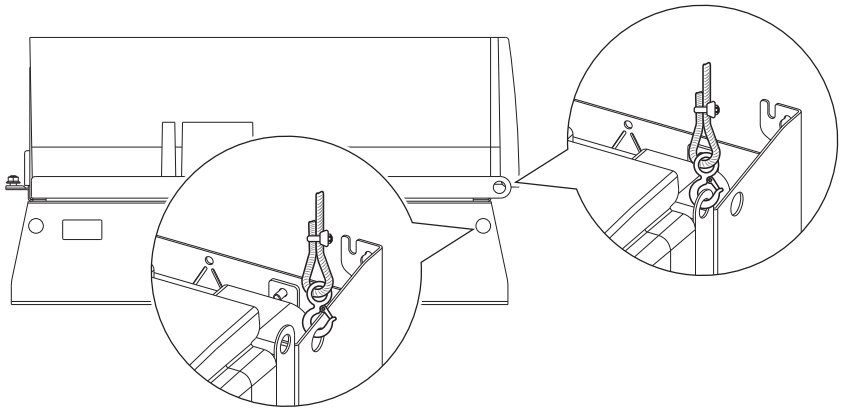

Figure 17 - Wall Mount Frame 7 Lifting Points – Eight Places

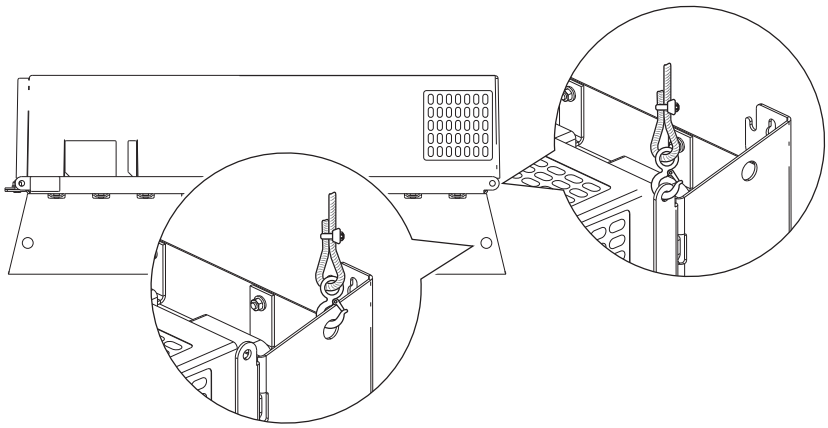

Enclosure Code G

Follow these guidelines for drives with enclosure code G.

Figure 18 - Wall Mount Frames 6 and 7 Lifting Points – Four Places

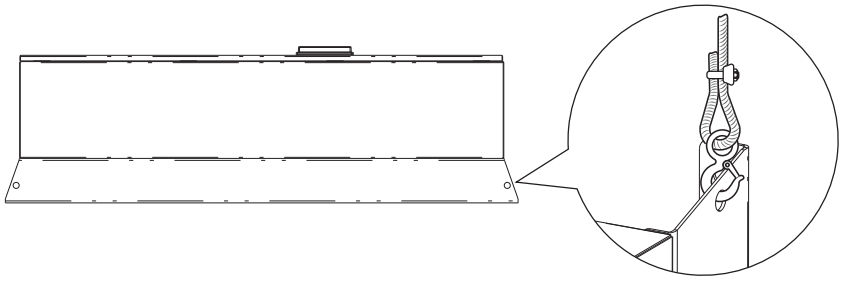

Open Type Drive (Removed from Cabinet)

Follow these guidelines for drives that are removed from the cabinet.

Figure 19 - Floor Mount Drive Assembly – IP00, NEMA/UL Type Open Drive Lifting Points – Two Places

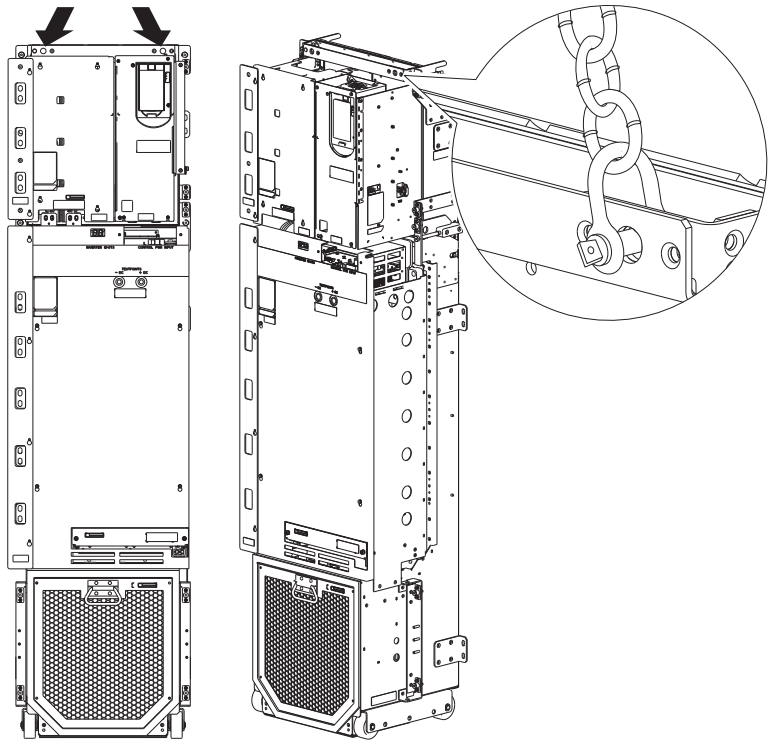

Enclosure Codes B and L

Follow these guidelines for drives with enclosure code B and L.

Figure 20 - Floor Mount Frame 8 Lifting Points – Two Places

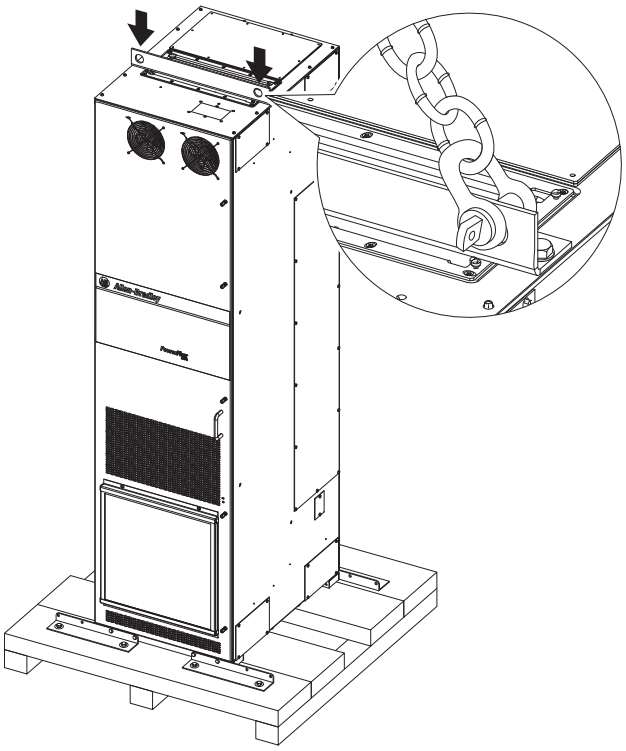

Figure 21 - Floor Mount Frames 9 and 10 Lifting Points – Two Places

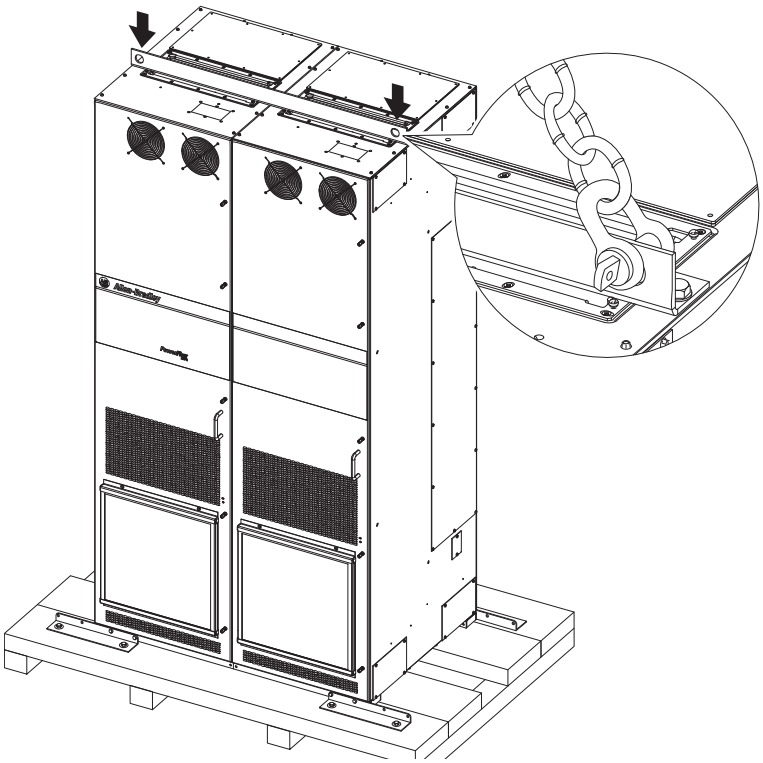

Enclosure Codes J, K, and Y

Follow these guidelines for drives with enclosure code J, H, and Y.

Figure 22 - Floor Mount Frame 9 with Cabinet Options Bay Lift Points – Two Places

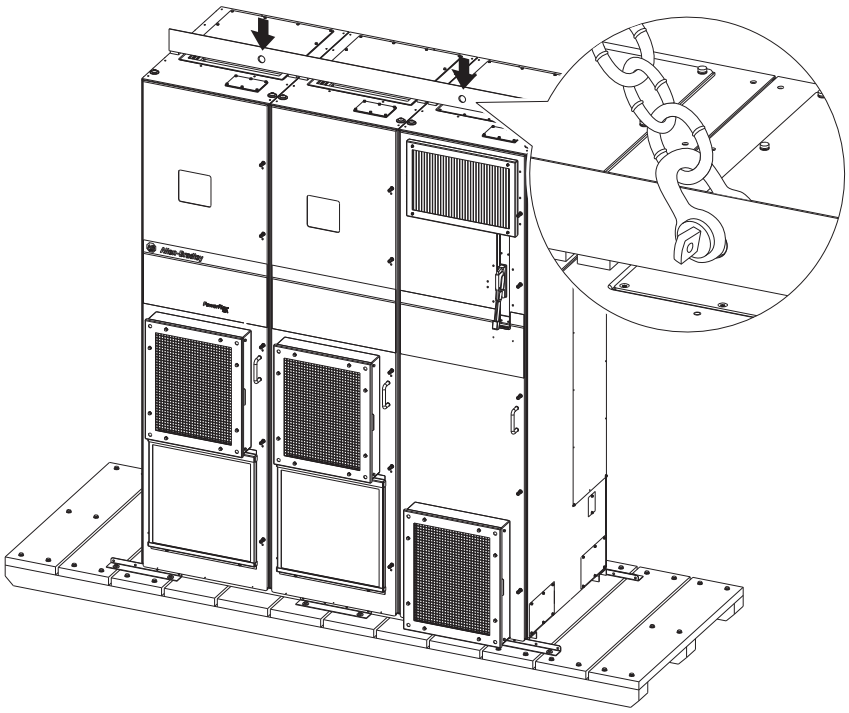

Release Floor Mount Drive Cabinet from Shipping Skid

Remove the bolts that fasten a vertically oriented drive cabinet to the shipping skid, and lift.

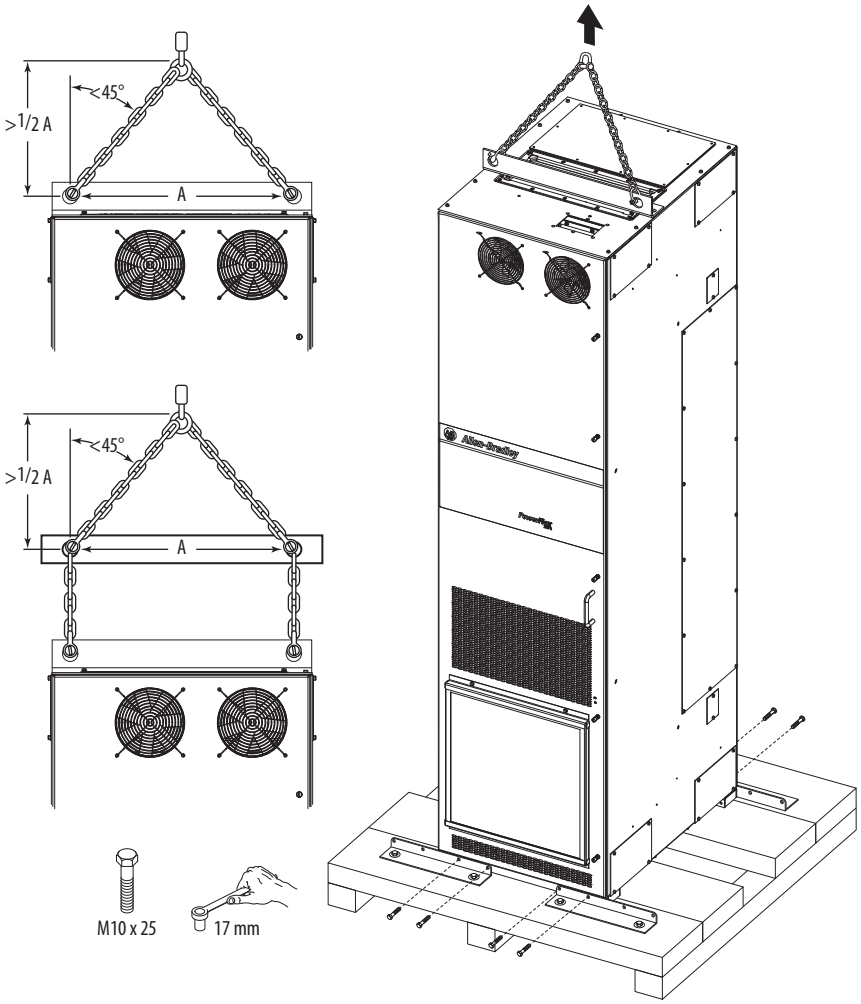

Remove the shipping crate that encloses a horizontally oriented drive cabinet on the shipping skid, and lift.

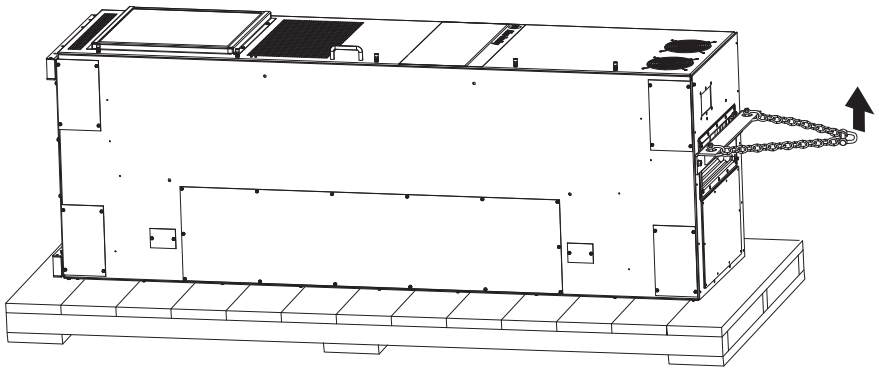

IMPORTANT For drives that are equipped with the MCC bus option, with codes P20, P22, and P24 in the catalog string, do not ship them horizontally.

Remove Drive Cabinet Lifting Angle

After the drive cabinet is in its final position, remove the lifting angle.

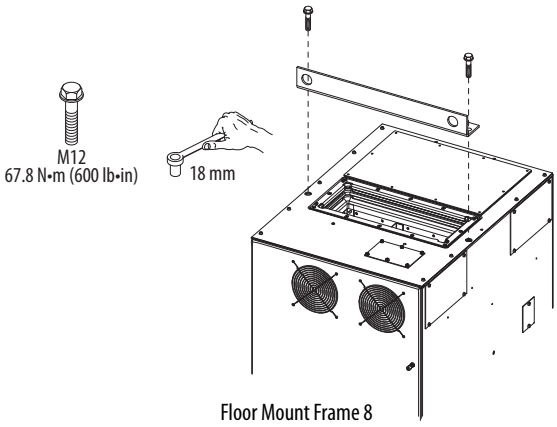

Floor Mount Frame 8

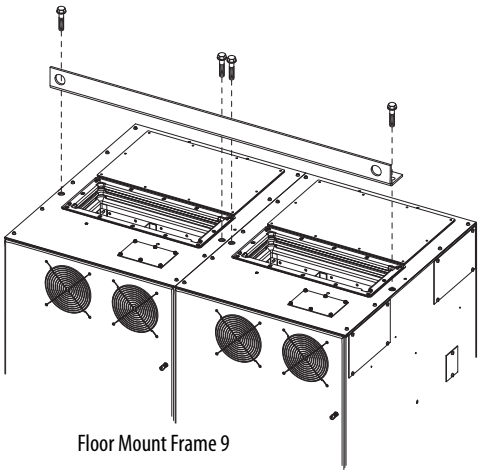

Floor Mount Frame 9

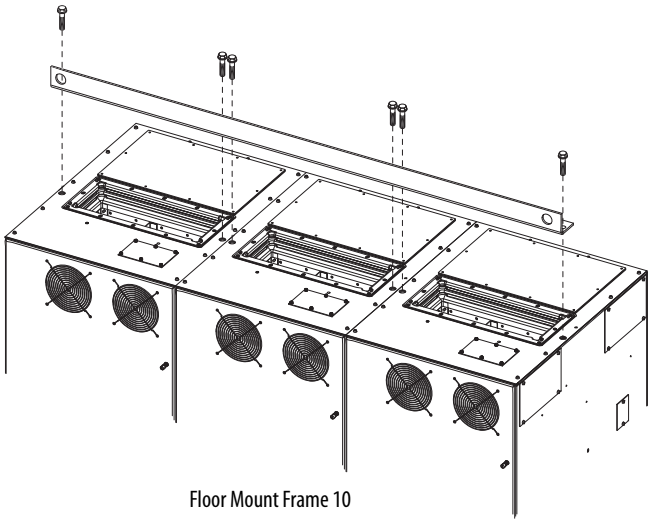

Floor Mount Frame 10

Install IP20, NEMA/UL Type 1 Debris Screen, or Optional Exhaust Hood

IP20, NEMA/UL Type 1 drives are equipped with a top mounted debris screen. An optional exhaust hood is also available as a kit (catalog number 20-750-HOOD1-F8).

1. Install the supplied debris screen over the exhaust vent.

   (Or install the optional exhaust hood with the grill that faces the front of the drive.)

2. Secure with the four screws provided.

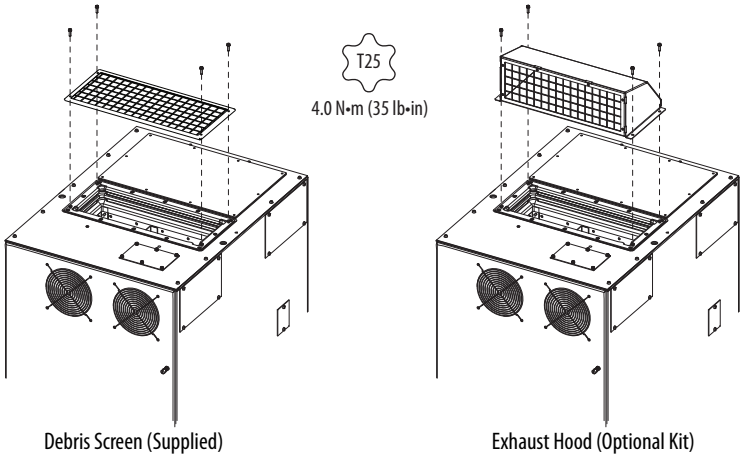

Install IP54, NEMA 12 Cabinet Blower Assembly and Exhaust Hood

IP54, NEMA 12 drives are equipped with top a mounted blower assembly and exhaust hood.

1. Install the cabinet blower assembly. Note the required power connection.
2. Secure with the ten screws provided.
3. Install the exhaust hood with the grill that faces the front of the drive.
4. Secure with the four screws provided.

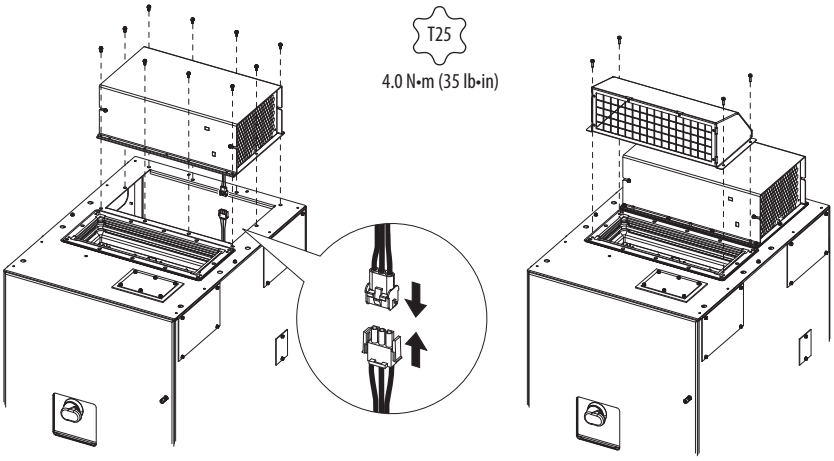

Install Floor Mount Drive with Cabinet Options Bay and Wiring Bay

Frame 9 drives that are configured with both the cabinet options bay and wiring bay ship in two sections. This section describes how to join the wiring bay to the cabinet options bay.

Remove the external wrapping and bus bar cover. Locate the hardware that is used to join the cabinets (hardware is shipped with the wiring bay).

Description	Quantity
M8 x 16 mm cabinet joining screw	20
M10 x 45 mm carriage bolt	12
Bus bar clamp plate	12

Description	Quantity
M10 nut with washer	12
M6 x 40 mm bolts	4
M6 flange nuts	4

Position the Drive Cabinets and Cabinet Options Bay

To position the drive cabinet and options bay, follow these steps.

1. Release the factory-assembled drive cabinets and cabinet options bay from the shipping skid.

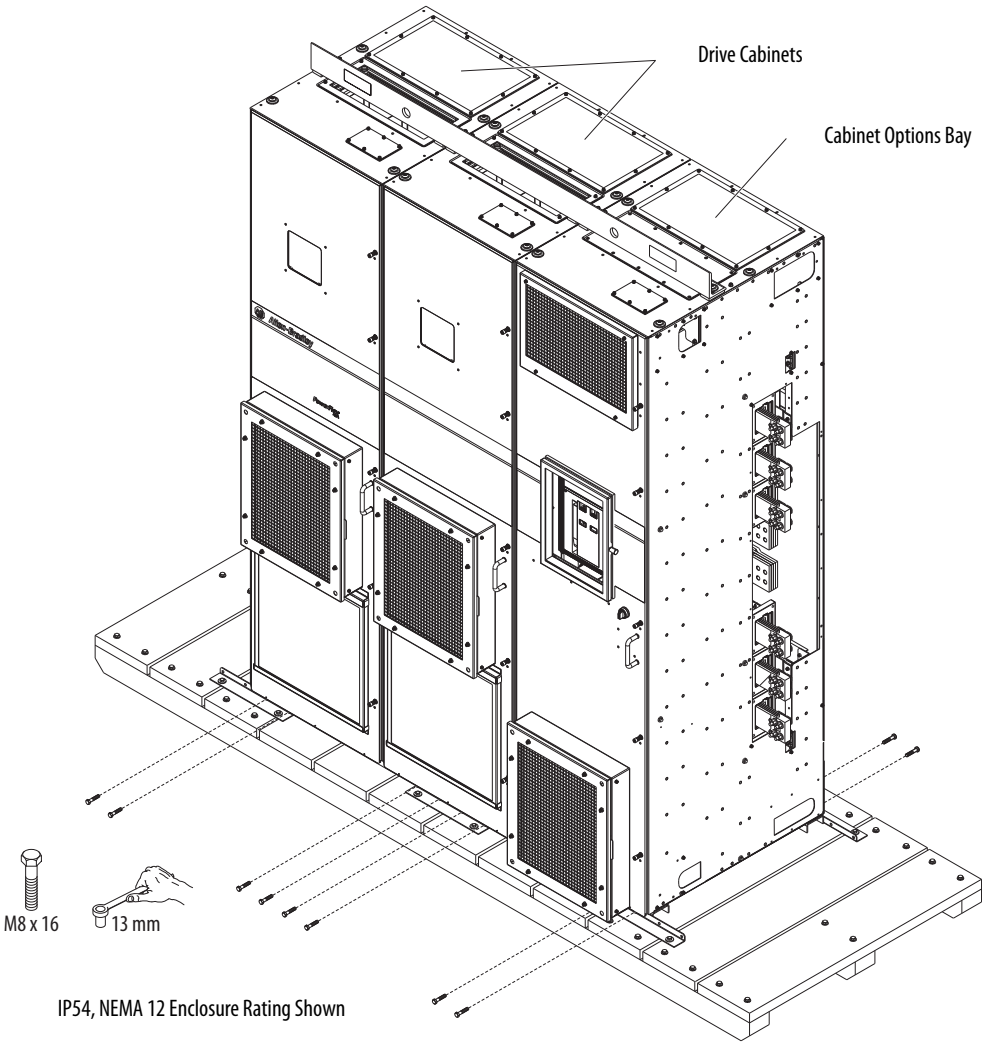

IP54, NEMA 12 Enclosure Rating Shown

2. Attach lifting hardware to the drive assembly.

   Follow lifting instructions and precautions that start on page 39.

3. Locate the factory-assembled drive cabinets and cabinet options bay in its final position.

4. Remove and discard the seven M8 sealing screws from the right side of the cabinet options bay.

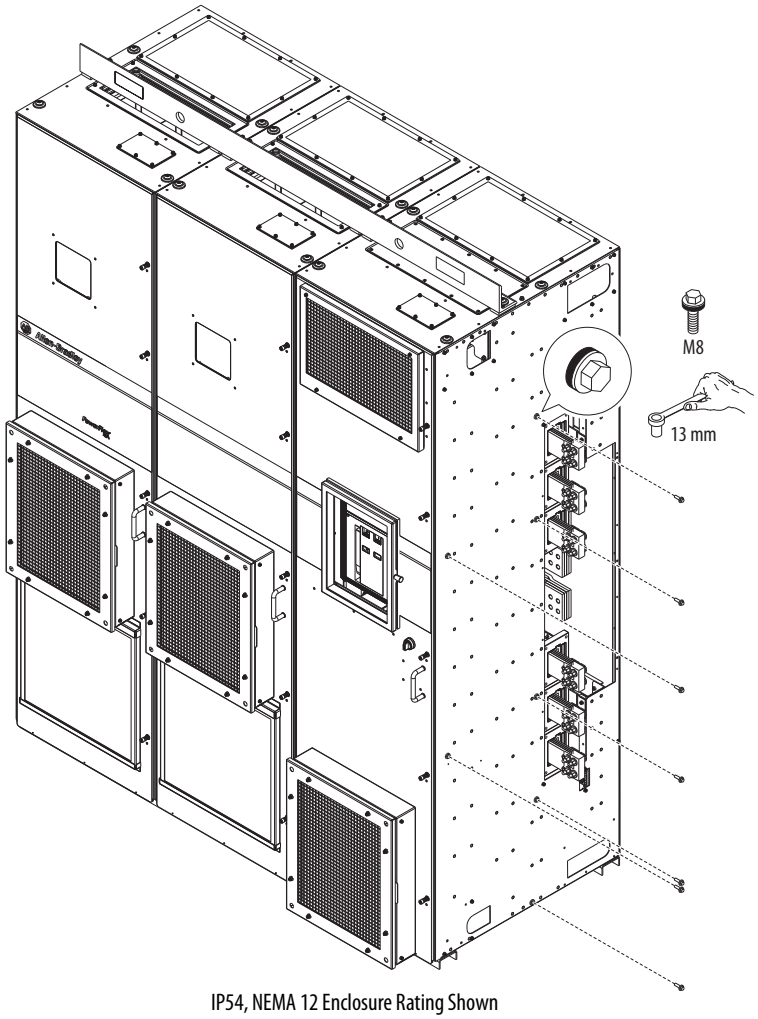

IP54, NEMA 12 Enclosure Rating Shown

Position the Wiring Bay

To position the wiring bay, follow these steps.

1. Remove and discard the screws that hold the protective panel against the left side of the wiring bay.

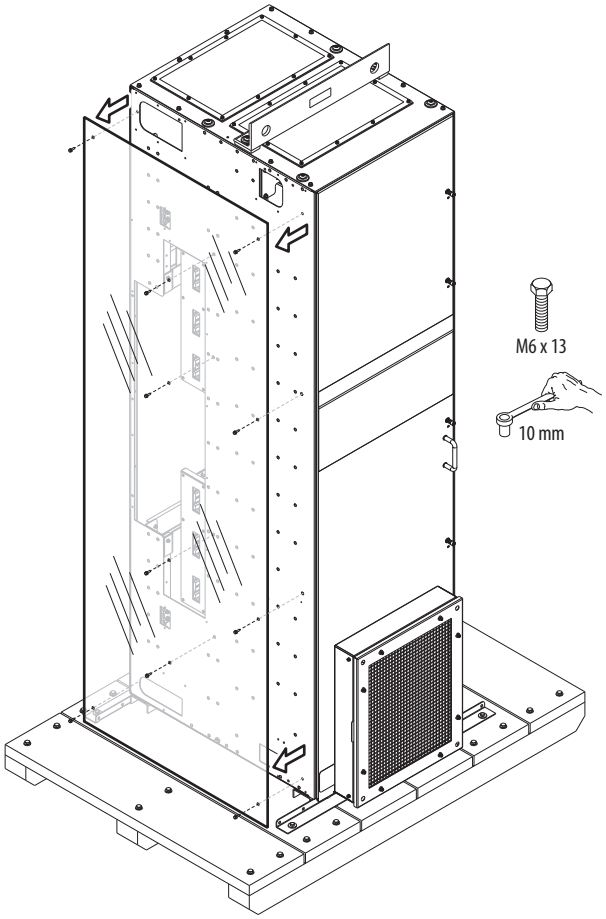

IP54, NEMA 12 Enclosure Rating Shown

2. Remove and discard the protective panel.

3. Remove and discard the wiring bay inner panels that cover the ends of the bus bars.

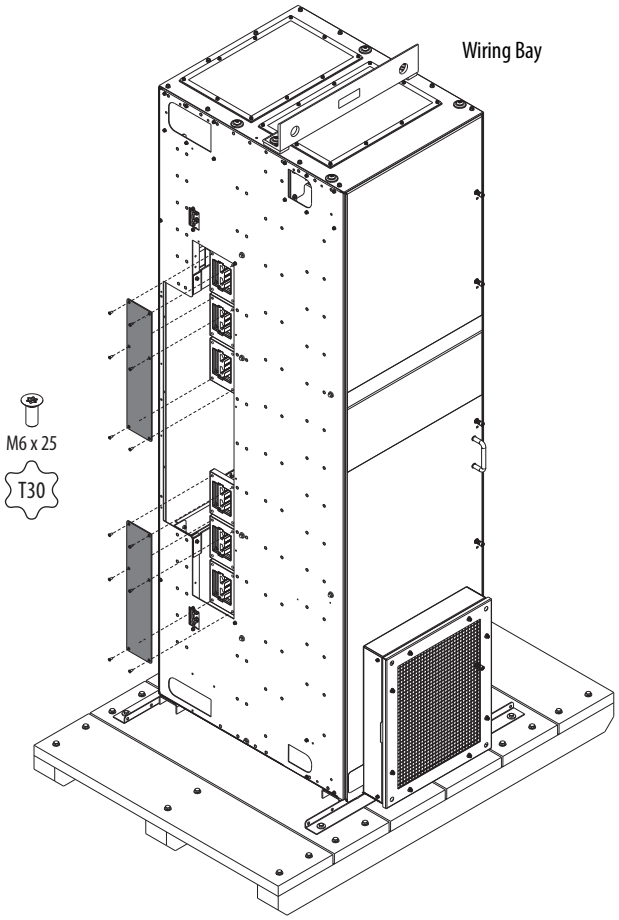

4. Release the wiring bay from the shipping skid.

   The shipping angles on the left side of the cabinet can be left in place to assist with alignment in step 6 on page 53. Remove the shipping angles after cabinets are aligned and joined.

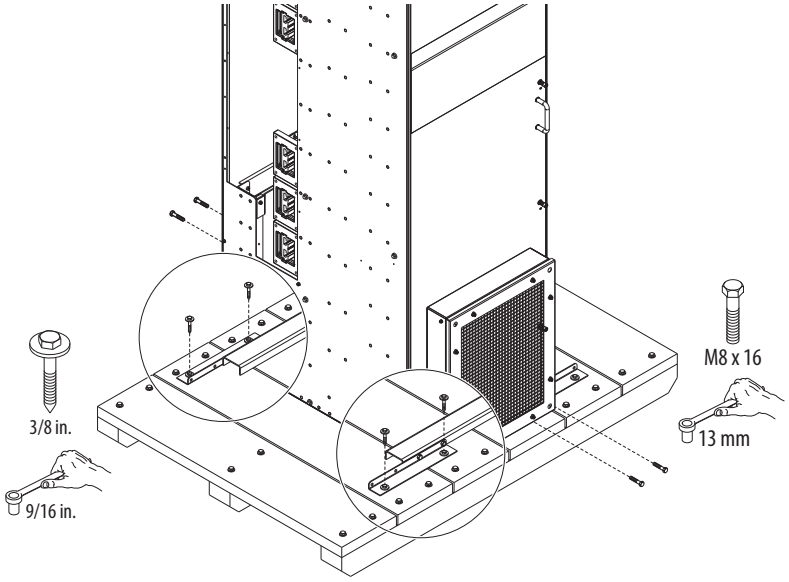

5. Align the wiring bay with cabinet options bay.
6. Bring the cabinets together.

   The bus bar couplers extend from the cabinet options cabinet and align with the bus bars in the wiring bay.

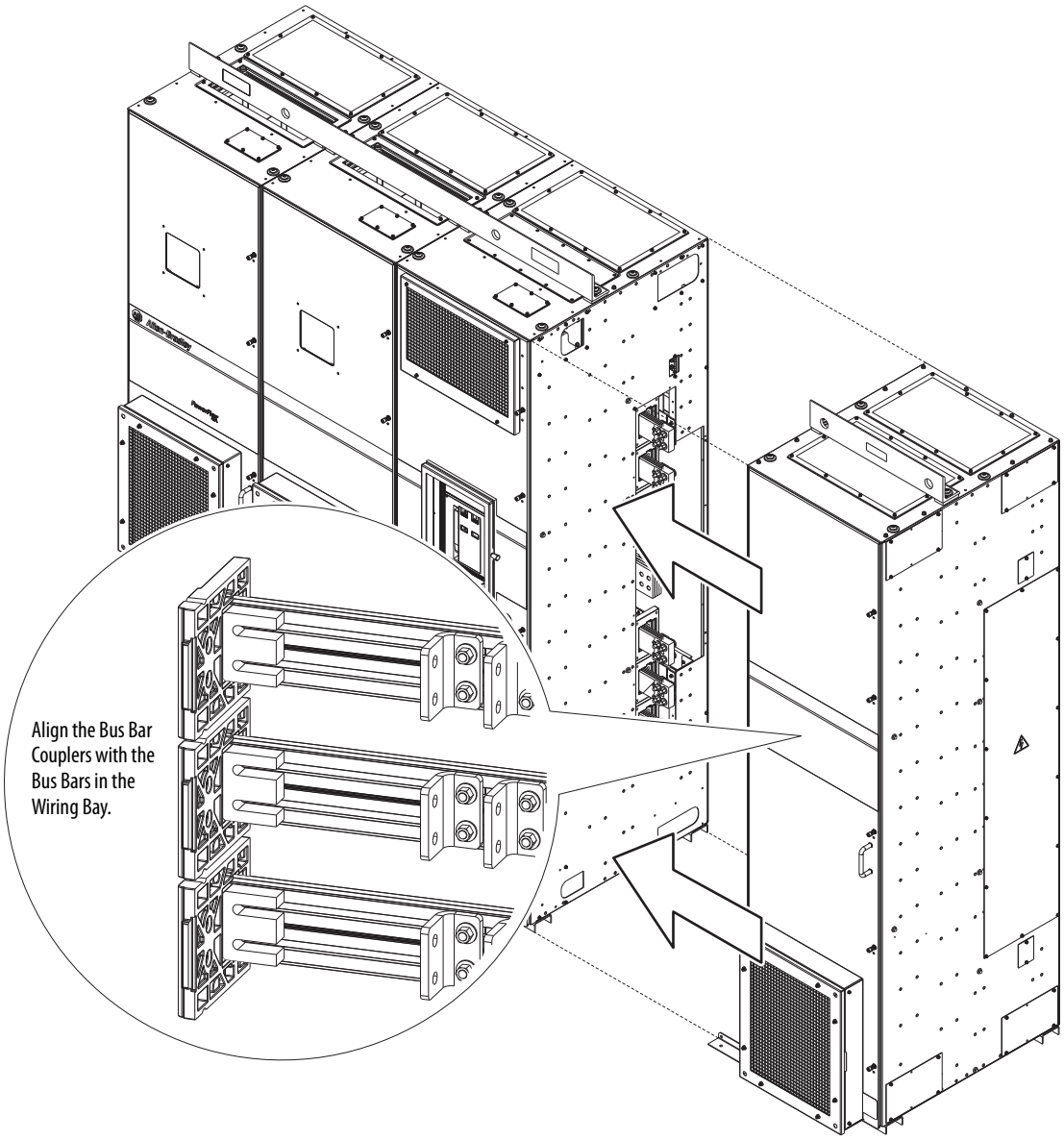

Join the Cabinets

To join the cabinets, follow these steps.

1. Pass the M8 x 16 mm hex-head thread-forming screws from inside the wiring bay through the clearance holes.
2. Engage the screws with the holes in the cabinet options bay.

   Make sure that the cabinets are level and aligned and pushed tightly together.
3. Lightly tighten the screws in a uniform pattern.

IMPORTANT Do not use hardware to draw cabinets together.

4. Torque the screws as shown here.

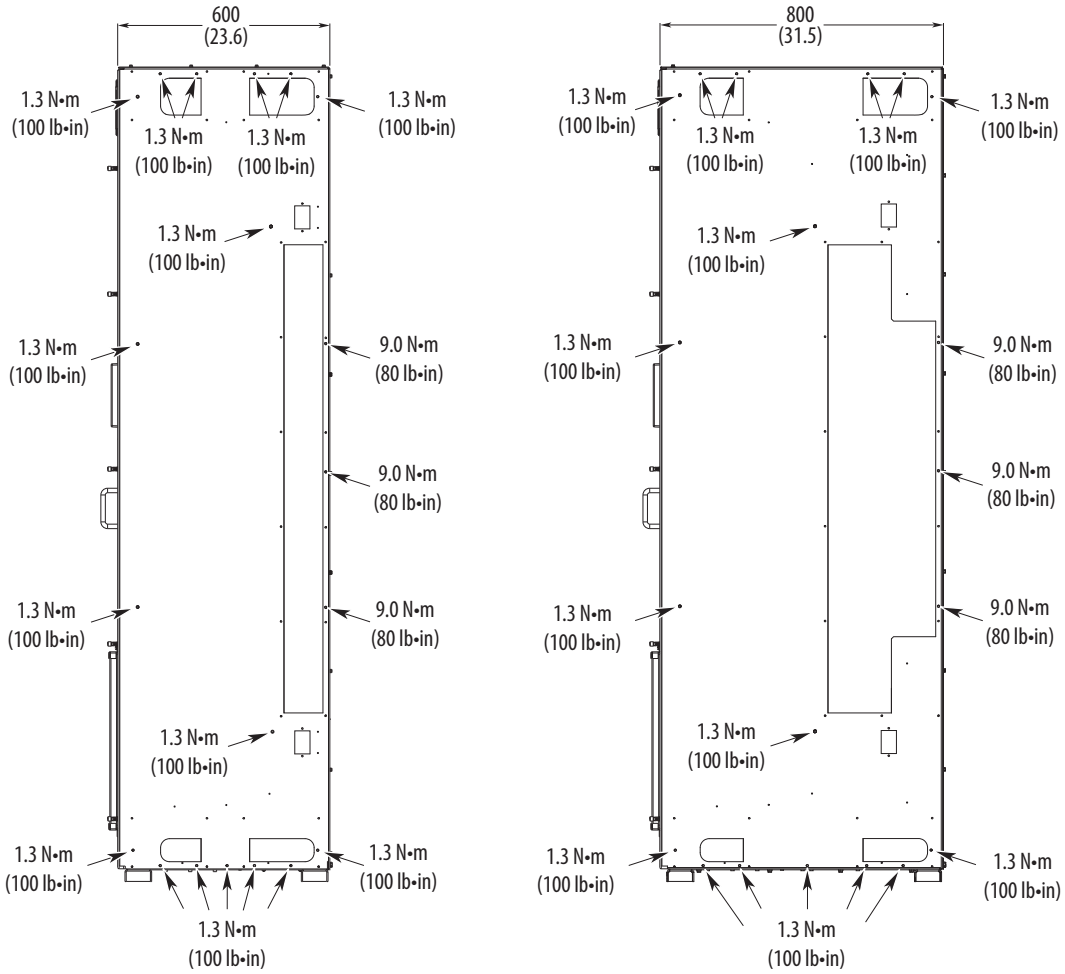

5. To access the channel notches, remove the left-most L-bracket from each of the six wiring bay bus bars.

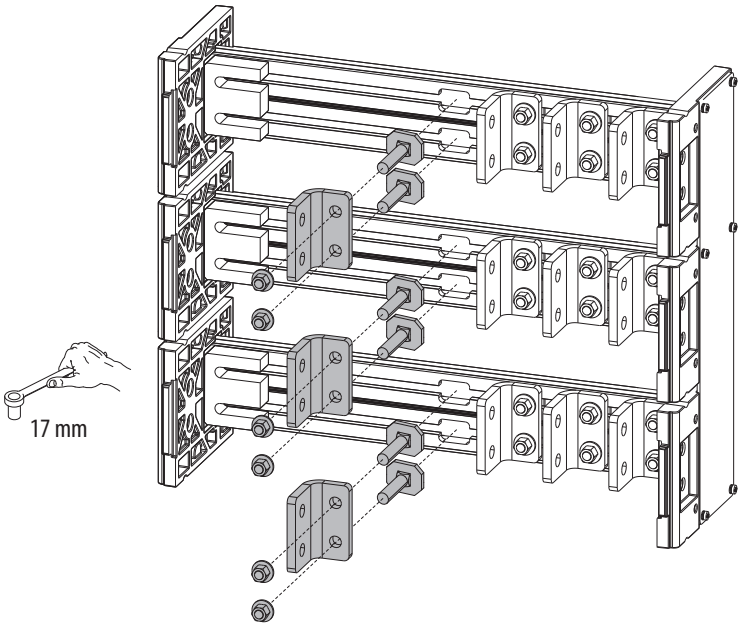

6. Insert the 12 carriage bolt assemblies into the 12 wiring bay bus bar channels.
7. Slide the carriage bolt assemblies into the bus bar couplers on the left and tighten.

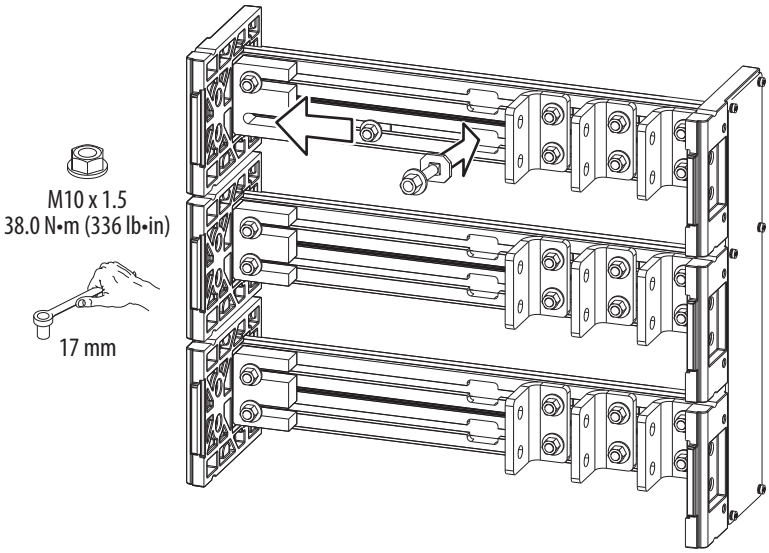

IMPORTANT

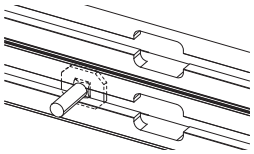

Verify that clamp fits squarely in the bus bar channel.

8. To secure the upper and lower PE bus bars to the cabinet bracket, use the M6 x 40 bolts and flange nuts.

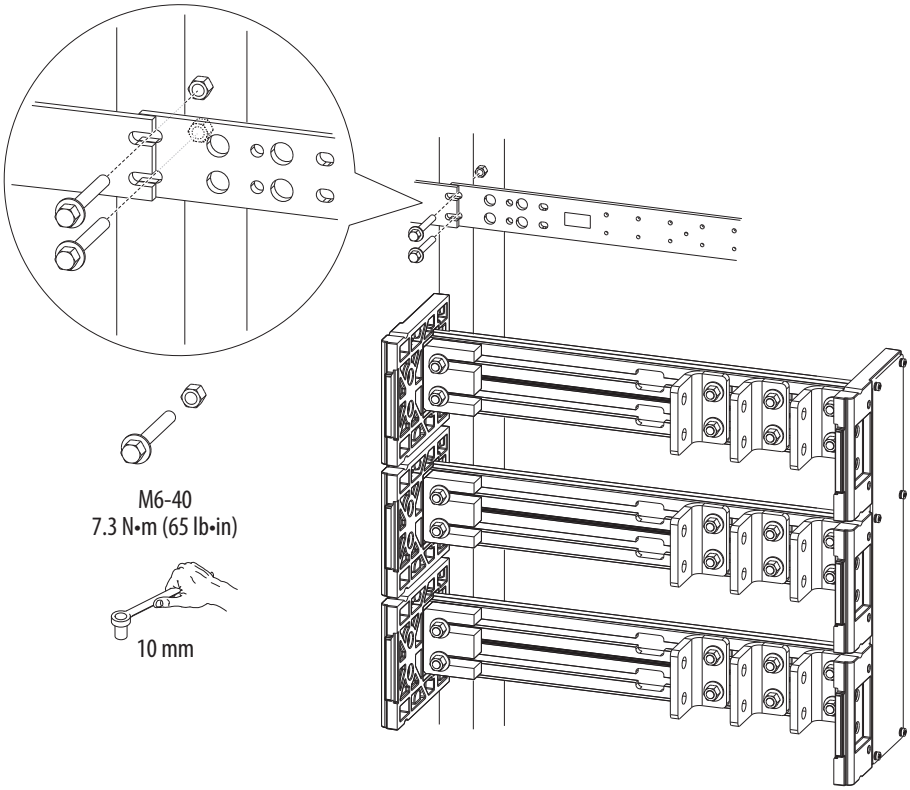

9. Reinstall the L-brackets that were removed in step 5.

   See pages 170...174 for torque requirements and addition L-bracket and wiring details.

Approximate Dimensions – Wall Mount Frames 1…7 and Floor Mount Frames 8…10

See Table 9 for an index of dimension drawings for wall mount and floor mount drives.

Table 9 - Dimension Drawing Index

Frame	Description	Page
1	IP20, NEMA/UL Open Type	58
2	IP20, NEMA/UL Open Type	58
	IP54, NEMA/UL Type 12	59
	IP54, NEMA/UL Type 12, bottom access	61
	Flange mount	62
3	IP20, NEMA/UL Open Type	58
	IP54, NEMA/UL Type 12	59
	IP54, NEMA/UL Type 12, bottom access	61
	Flange mount	63
4	IP20, NEMA/UL Open Type	58
	IP54, NEMA/UL Type 12	59
	IP54, NEMA/UL Type 12, bottom access	61
	Flange mount	64
5	IP20, NEMA/UL Open Type	58
	IP54, NEMA/UL Type 12	59
	IP54, NEMA/UL Type 12, bottom access	61
	Flange mount	65
1…5	NEMA/UL Type 1 Kit	66
1…5	NEMA/UL Type 1, bottom access	67
1…5	EMC plate kit	68
6	IP00, NEMA/UL Open Type	69
	IP54, NEMA/UL Type 12	70
	Flange mount	71
	NEMA/UL Type 1 Kit	72
7	IP00, NEMA/UL Open Type	69
	IP54, NEMA/UL Type 12	73
	Flange mount	74
	NEMA/UL Type 1 Kit	75
8	IP20, NEMA/UL Type 1, MCC style cabinet, 600 mm (23.6 in.) deep	76
	IP20, NEMA/UL Type 1, MCC style cabinet, 800 mm (31.5 in.) deep	77
	IP54, NEMA 12, MCC style cabinet, 800 mm (31.5 in.) Deep	78
9	IP20, NEMA/UL Type 1, MCC style cabinet, 600 mm (23.6 in.) deep	79
	IP20, NEMA/UL Type 1, MCC style cabinet, 800 mm (31.5 in.) deep	80
	IP54, NEMA 12, MCC style cabinet, 800 mm (31.5 in.) deep	81

Table 9 - Dimension Drawing Index (Continued)

10	IP20, NEMA/UL Type 1, MCC style cabinet, 600 mm (23.6 in.) deep	82
	IP20, NEMA/UL Type 1, MCC style cabinet, 600 mm (23.6 in.) deep, bottom access	83
	IP20, NEMA/UL Type 1, MCC style cabinet, 800 mm (31.5 in.) deep	84
	IP20, NEMA/UL Type 1, MCC style cabinet, 800 mm (31.5 in.) deep, bottom access	85
	IP54, NEMA 12, MCC style cabinet, 800 mm (31.5 in.) deep	86
	IP54, NEMA 12, MCC style cabinet, 800 mm (31.5 in.) deep, bottom access	87

See page 88 for dimensions of drives with cabinet options.

Figure 23 - IP20, NEMA/UL Open Type, Wall Mount Frames 1…5 (Frame 2 Shown)

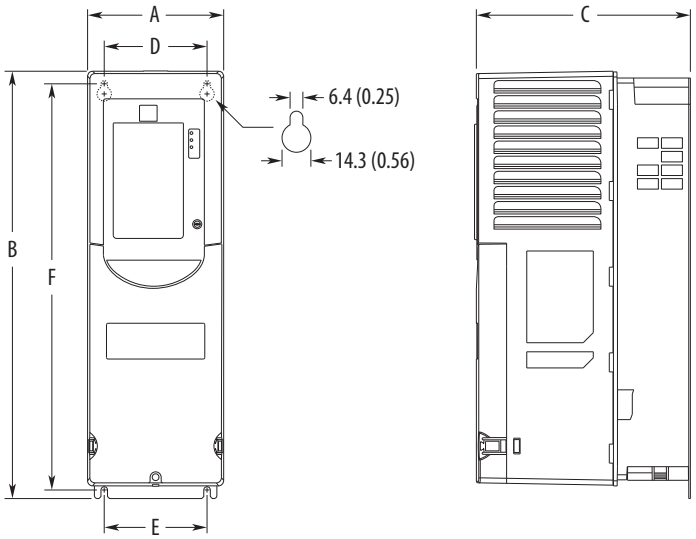

Dimensions are in millimeters and (inches).
Weights are in kilograms and (pounds).

Frame	A	B	C	D	E	F	Weight, kg (lb)
1	110.0 (4.33)	400.5 (15.77)	211.0 (8.31)	68.0 (2.68)	82.0 (3.23)	390.4 (15.37)	6.0 (12.75)
2	134.5 (5.30)	424.2 (16.70)	212.0 (8.35)	100.0 (3.94)	100.0 (3.94)	404.2 (15.91)	7.8 (17.2)
3	190.0 (7.48)	454.0 (17.87)	212.0 (8.35)	158.0 (6.22)	158.0 (6.22)	435.0 (17.13)	11.8 (26.1)
4	222.0 (8.74)	474.0 (18.66)	212.0 (8.35)	194.0 (7.64)	202.0 (7.95)	455.0 (17.91)	13.6 (30.0)
5	270.0 (10.63)	550.0 (21.65)	212.0 (8.35)	238.0 (9.37)	238.0 (9.37)	531.0 (20.91)	20.4 (45.0)

M6 (#10 or #12) mounting hardware recommended.

Figure 24 - IP54, NEMA/UL Type 12, Wall Mount Frames 2…5 (Frame 2 Shown)

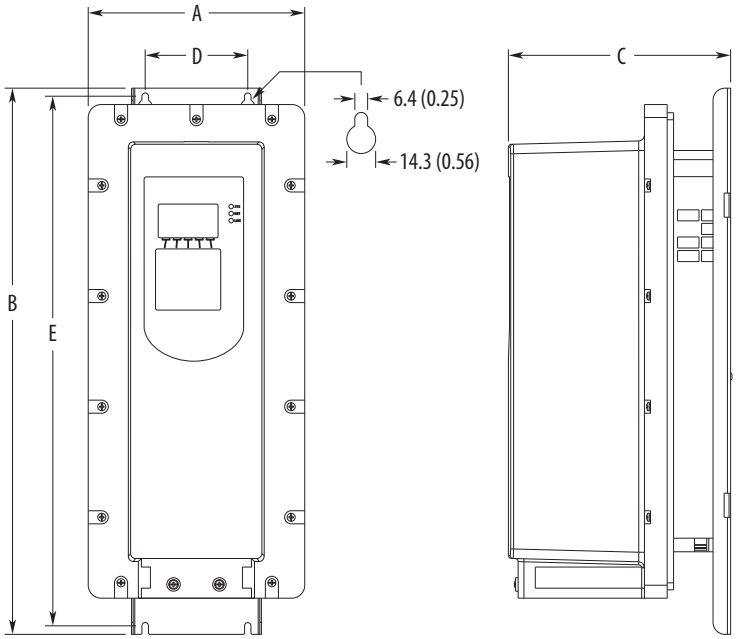

Dimensions are in millimeters and (inches).
Weights are in kilograms and (pounds).

Frame	A	B	C	D	E	Weight, kg (lb)
2	215.3 (8.48)	543.2 (21.39)	222.2 (8.75)	100.0 (3.94)	528.2 (20.80)	7.8 (17.2)
3	268.0 (10.55)	551.0 (21.69)	220.1 (8.67)	158.0 (6.22)	533.0 (20.98)	11.8 (26.1)
4	300.0 (11.81)	571.0 (22.48)	220.1 (8.67)	194.0 (7.64)	553.0 (21.77)	13.6 (30.0)
5	348.0 (13.70)	647.0 (25.47)	220.1 (8.67)	238.0 (9.37)	629.0 (24.76)	20.4 (45.0)

M6 (#10 or #12) mounting hardware recommended.

Figure 25 - P54, NEMA/UL Type 12, Wall Mount Frames 2…5 Human Interface Module Access

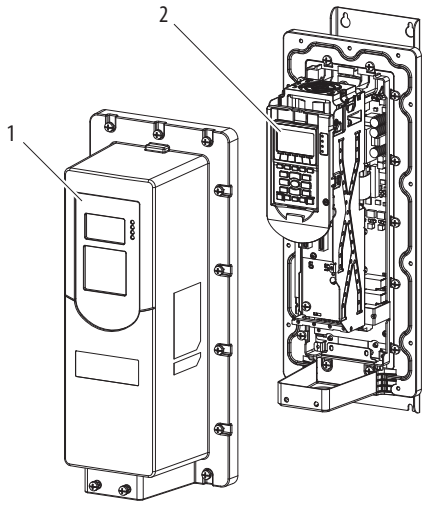

No.	Description
1	Flexible panel that is molded into the IP54, NEMA/UL Type 12 cover.
2	Human interface module, catalog number 20-HIM-A6, under cover in control pod cradle.

Figure 26 - IP54, NEMA/UL Type 12, Wall Mount Frames 2…5, Bottom Access

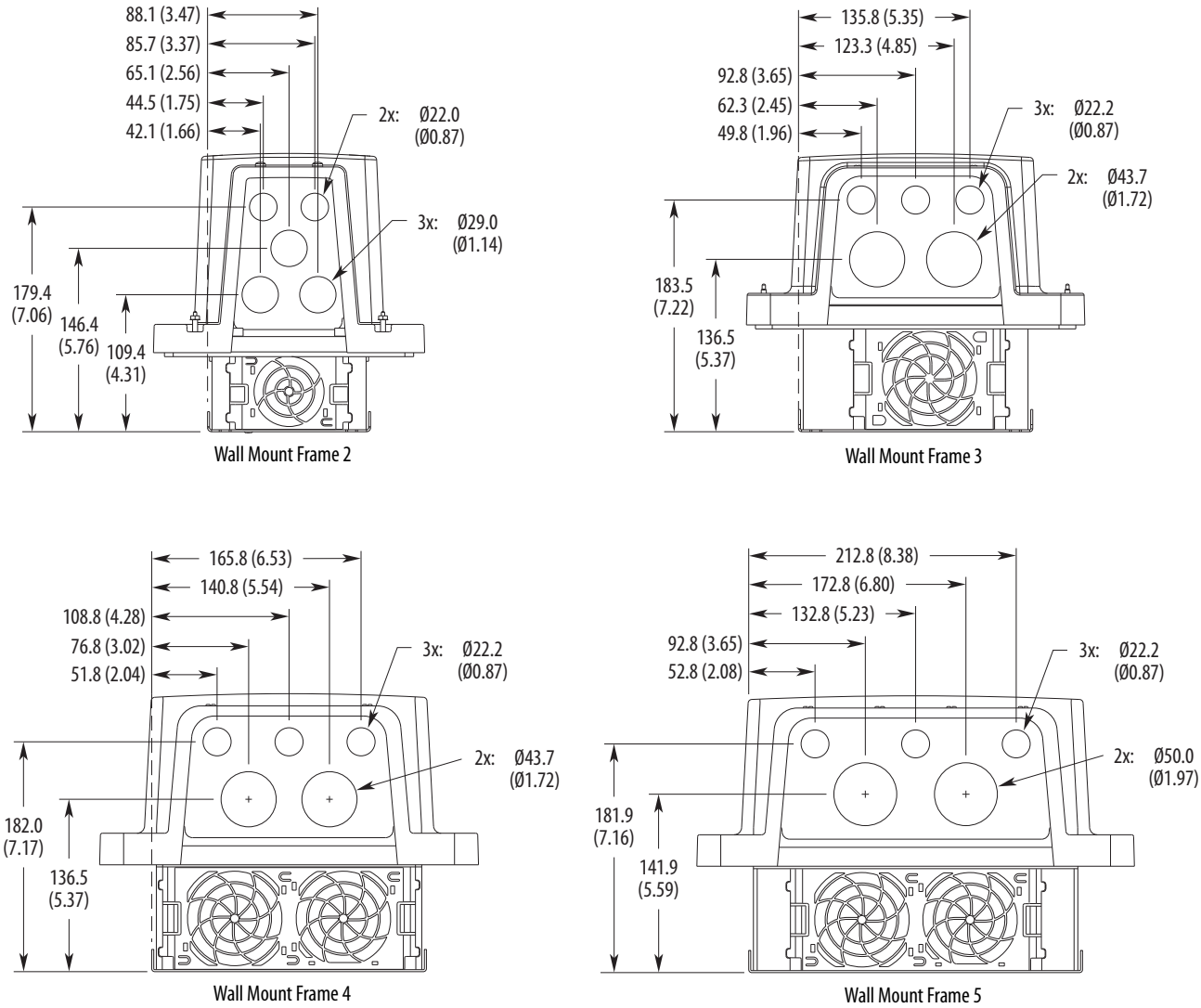

Dimensions are in millimeters and (inches).

Figure 27 - Flange Mount, Frame 2

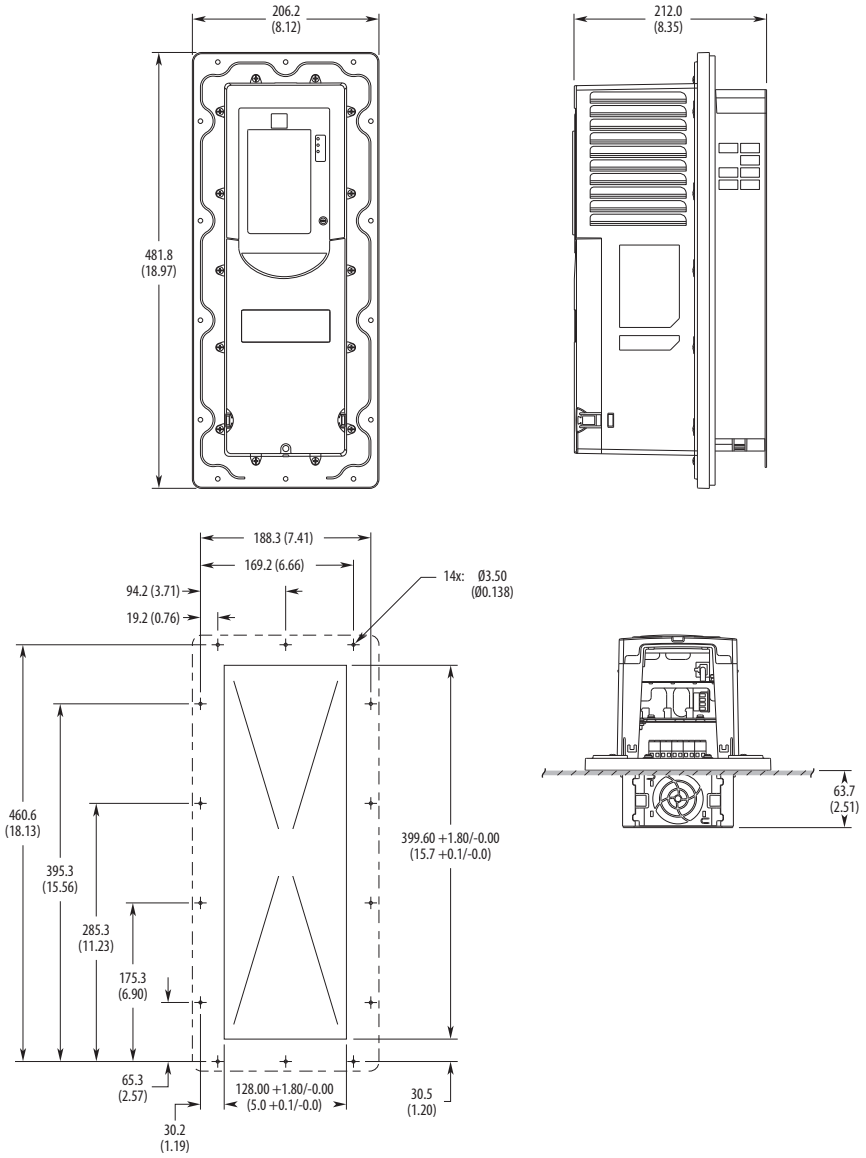

Dimensions are in millimeters and (inches).

IMPORTANT Must use mounting hardware that is supplied to meet enclosure rating.

Figure 28 - Flange Mount, Frame 3

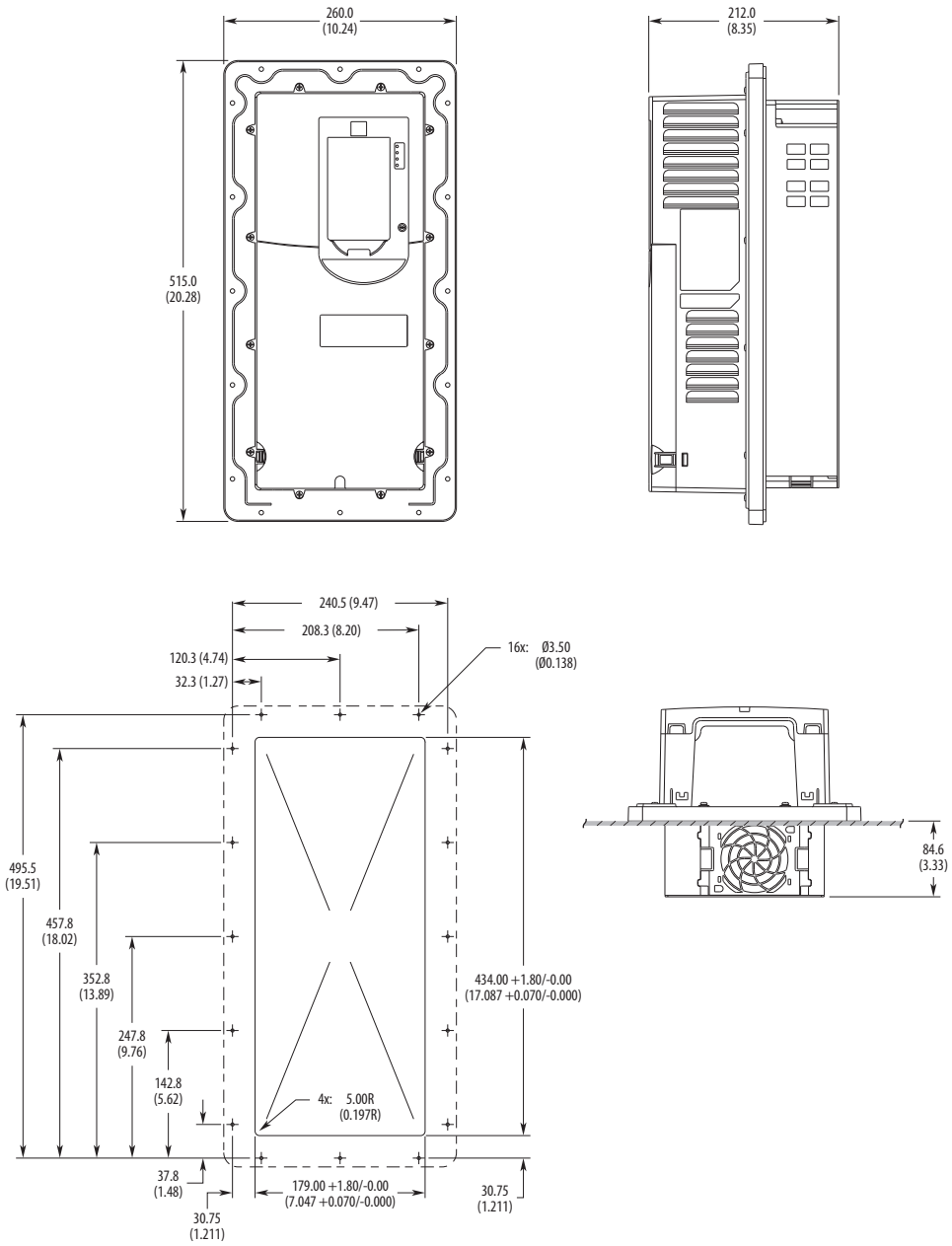

Dimensions are in millimeters and (inches).

IMPORTANT Must use mounting hardware that is supplied to meet enclosure rating.

Figure 29 - Flange Mount, Frame 4

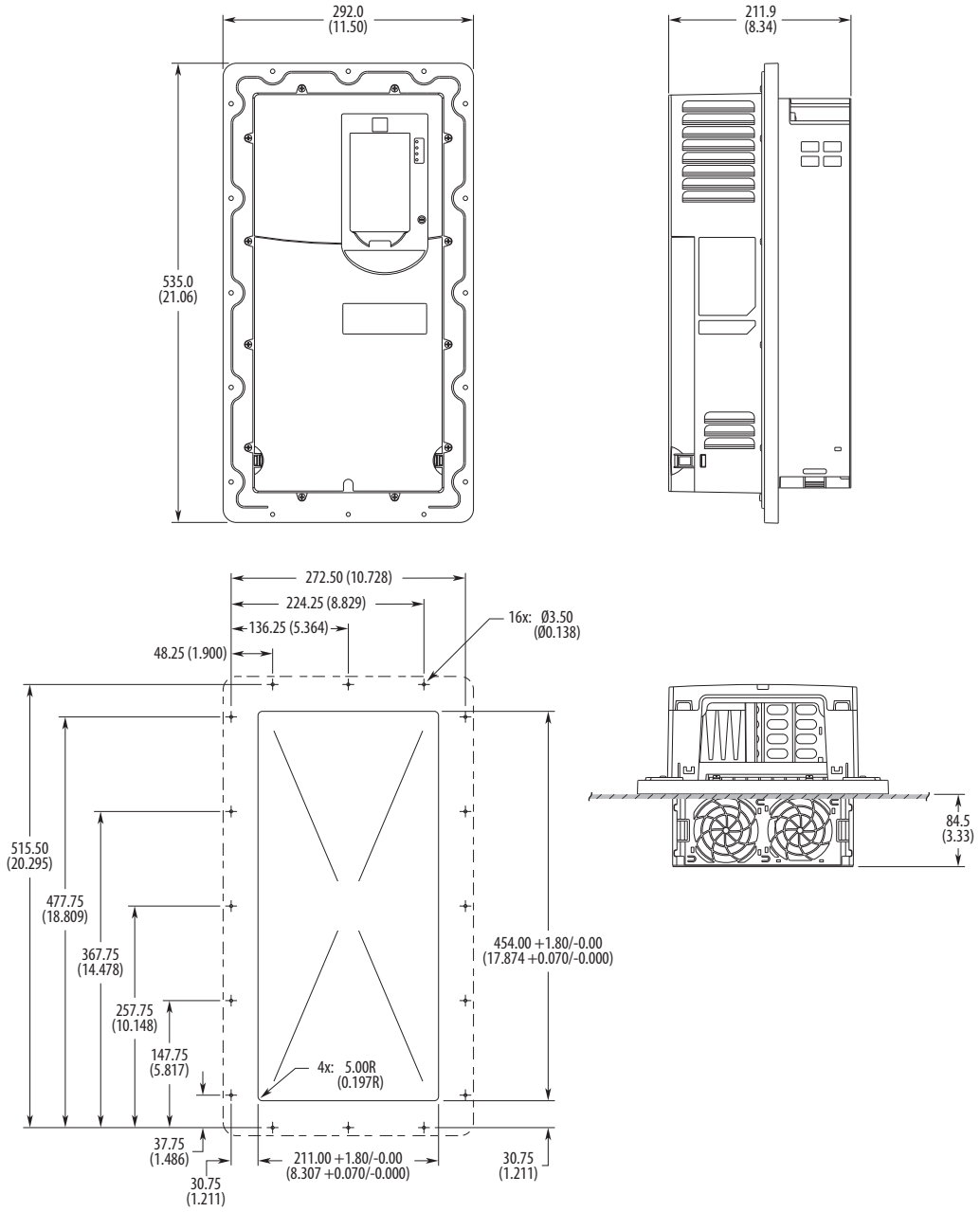

Dimensions are in millimeters and (inches).

IMPORTANT Must use mounting hardware that is supplied to meet enclosure rating.

Figure 30 - Flange Mount, Frame 5

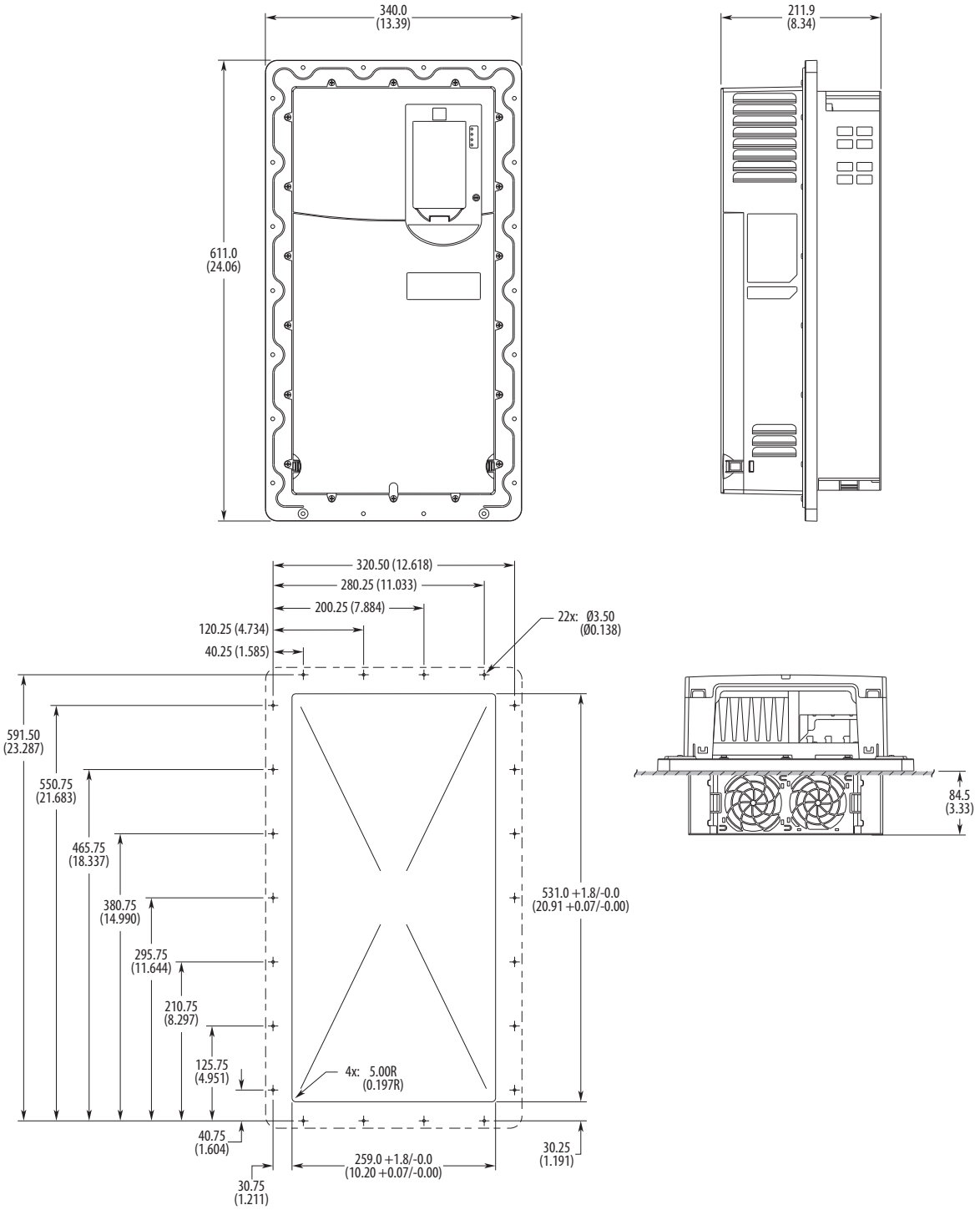

Dimensions are in millimeters and (inches).

IMPORTANT Must use mounting hardware that is supplied to meet enclosure rating.

Figure 31 - NEMA/UL Type 1 Kit, Wall Mount Frames 1…5 (Frame 4 Shown)

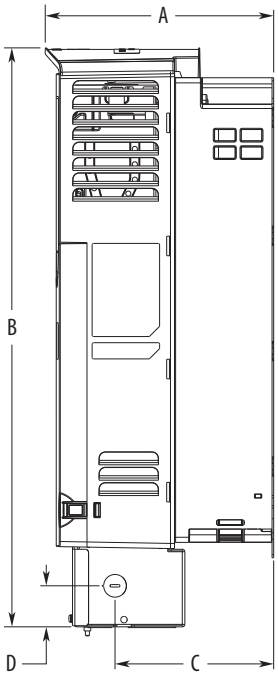

Dimensions are in millimeters and (inches).

Frame	A	B	C	D
1	215.4 (8.48)	458.8 (18.06)	–	–
2	222.2 (8.75)	497.1 (19.57)	117.7 (4.63)	38.0 (1.50)
3	223.1 (8.78)	530.1 (20.87)	154.7 (6.09)	38.0 (1.50)
4	222.7 (8.77)	564.4 (22.22)	154.7 (6.09)	40.0 (1.57)
5	222.7 (8.77)	665.4 (26.20)	155.0 (6.10)	55.0 (2.17)

IMPORTANT NEMA Type 1 kits (catalog number 20-750-NEMA1-F*x*) do not change the mounting dimensions in Figure 23 (where *x* is the frame size of the drive)

Figure 32 - NEMA/UL Type 1, Wall Mount Frames 1…5, Bottom Access

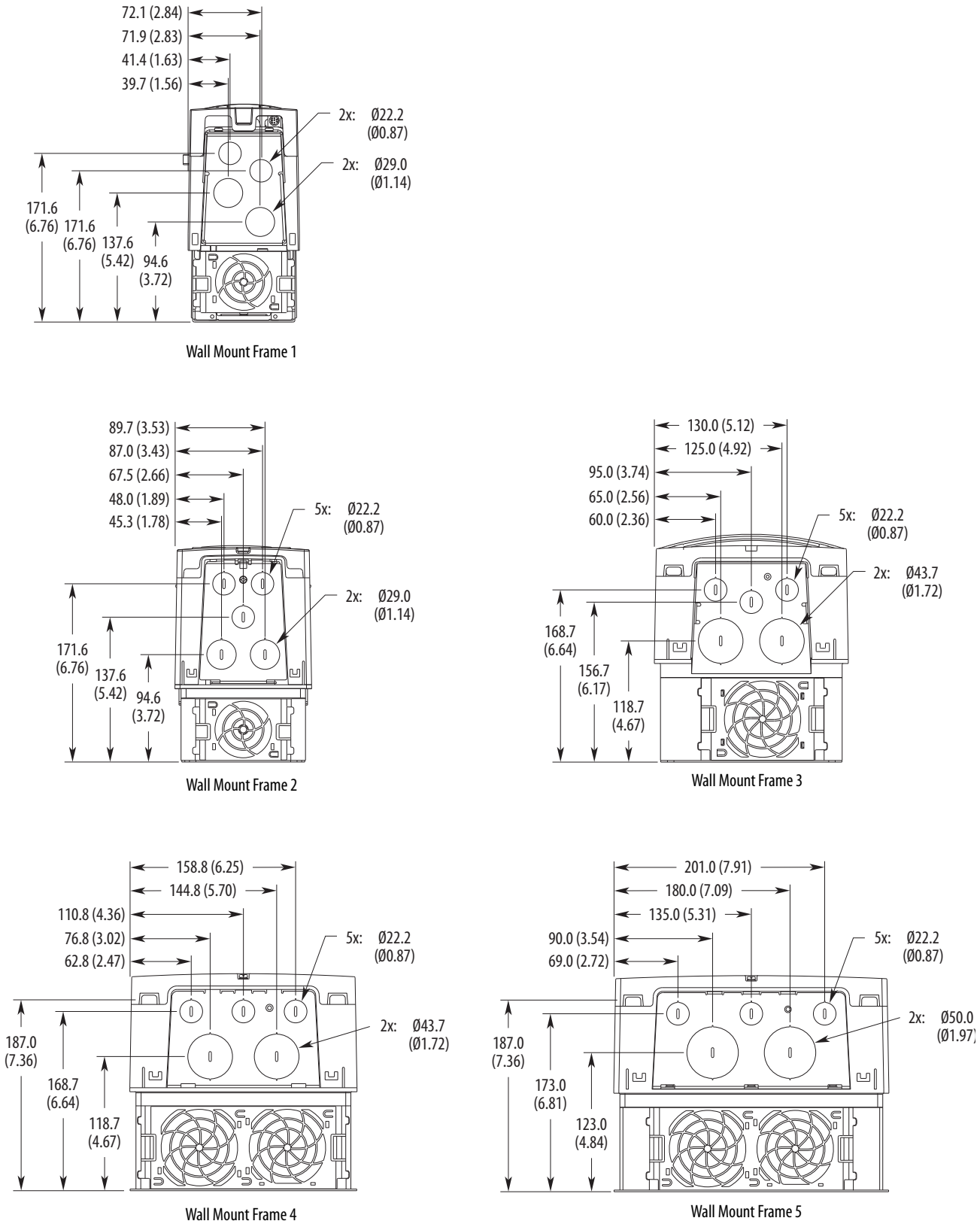

Dimensions are in millimeters and (inches).

Figure 33 - EMC Plate Kit, Wall Mount Frames 1…5 (Frame 4 Shown)

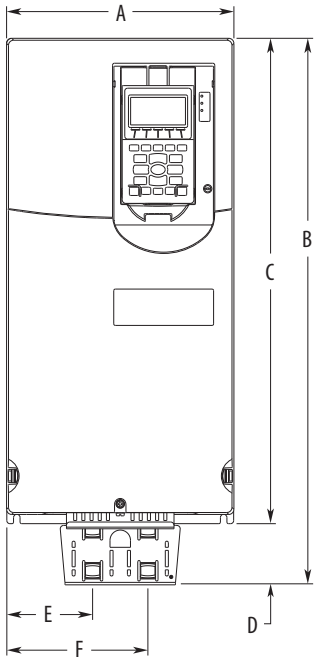

Dimensions are in millimeters and (inches).

Frame	A	B	C	D	E	F
1	110.0 (4.33)	478.8 (18.85)	400.5 (15.77)	78.3 (3.08)	37.4 (1.47)	73.4 (2.89)
2	134.5 (5.30)	485.9 (19.13)	424.2 (16.70)	61.7 (2.43)	43.5 (1.71)	79.5 (3.13)
3	190.0 (7.48)	514.0 (20.24)	454.0 (17.87)	60.0 (2.36)	74.0 (2.91)	116.0 (4.57)
4	222.0 (8.74)	533.7 (21.01)	474.0 (18.66)	59.7 (2.35)	84.0 (3.31)	138.0 (5.43)
5	270.0 (10.63)	609.7 (24.00)	550.0 (21.65)	59.7 (2.35)	77.8 (3.06)	191.8 (7.55)

IMPORTANT EMC Kits (20-750-EMC*x*-F*x*) do not change the mounting dimensions in Figure 23. See the PowerFlex® 750-Series EMC Plate and Cores Installation Instructions, publication 750-IN006, for detailed information on kit installation.

Figure 34 - IP00, NEMA/UL Open Type, Wall Mount Frames 6 and 7 (Frame 6 Shown)

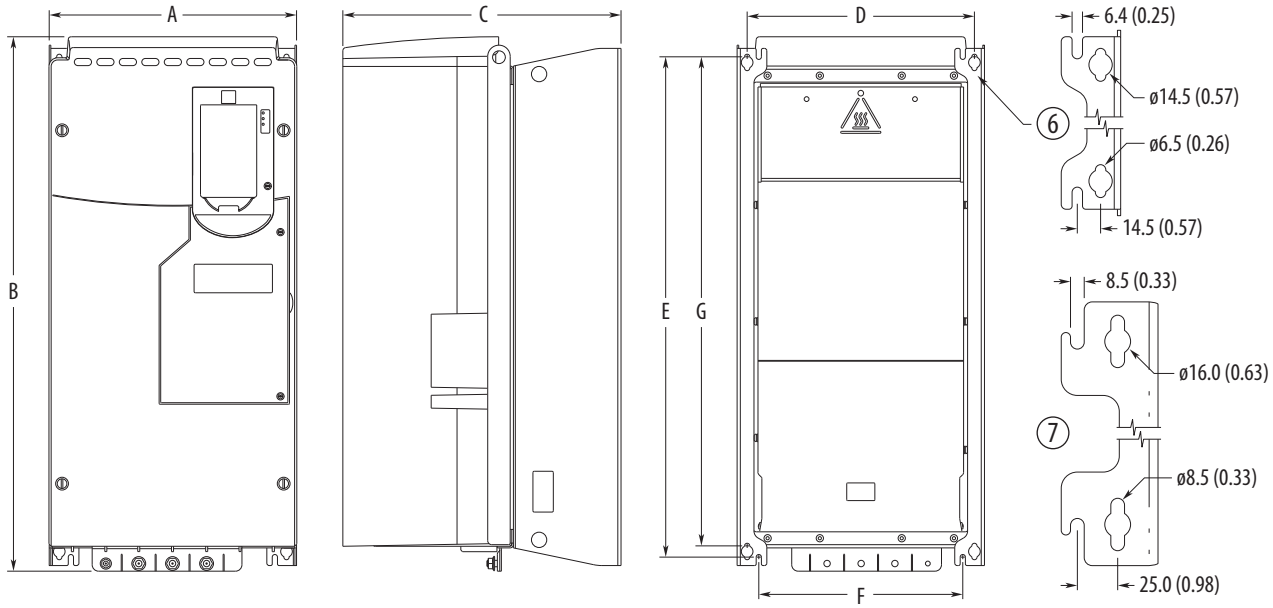

Dimensions are in millimeters and (inches).

Frame	A	B	C	D	E	F	G	Weight kg (lb)
6	308.0 (12.13)	665.5 (26.20)	346.4 (13.64)	283.0 (11.14)	623.0 (24.53)	254.0 (10.00)	609.0 (23.98)	38.6 (85.0)
7	430.0 (16.93)	881.5 (34.70)	349.6 (13.76)	380.0 (14.96)	838.0 (32.99)	330.0 (12.99)	825.0 (32.48)	72.6…108.9 (160.0…240.0)

Frame 6: M6 (#12) mounting hardware recommended.
Frame 7: M8 (5/16 in.) mounting hardware recommended.

IMPORTANT Always install mounting hardware in all four corners of the mounting legs for stability.

Only install mounting hardware through the top key holes to help make sure that the drive is securely fastened to the mounting surface.

At the bottom of the mounting legs, either the key holes or optional open mounting slots can be used.

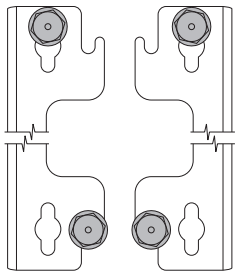

Figure 35 - IP54, NEMA/UL Type 12, Wall Mount Frame 6

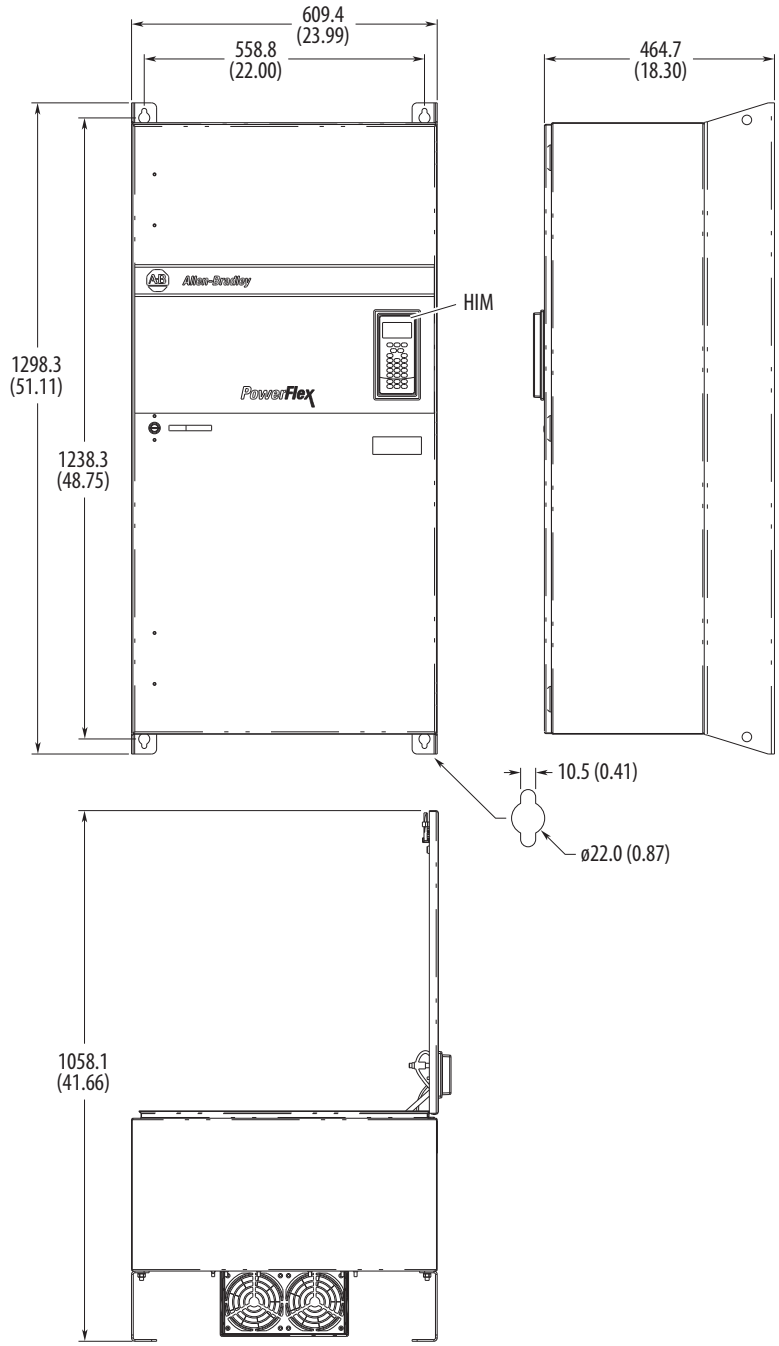

IMPORTANT Must use human interface module (HIM), catalog number 20-HIM-C6S, to meet enclosure rating.

Dimensions are in millimeters and (inches).

M10 (7/16 in.) mounting hardware recommended.

Figure 36 - Flange Mount, Frame 6

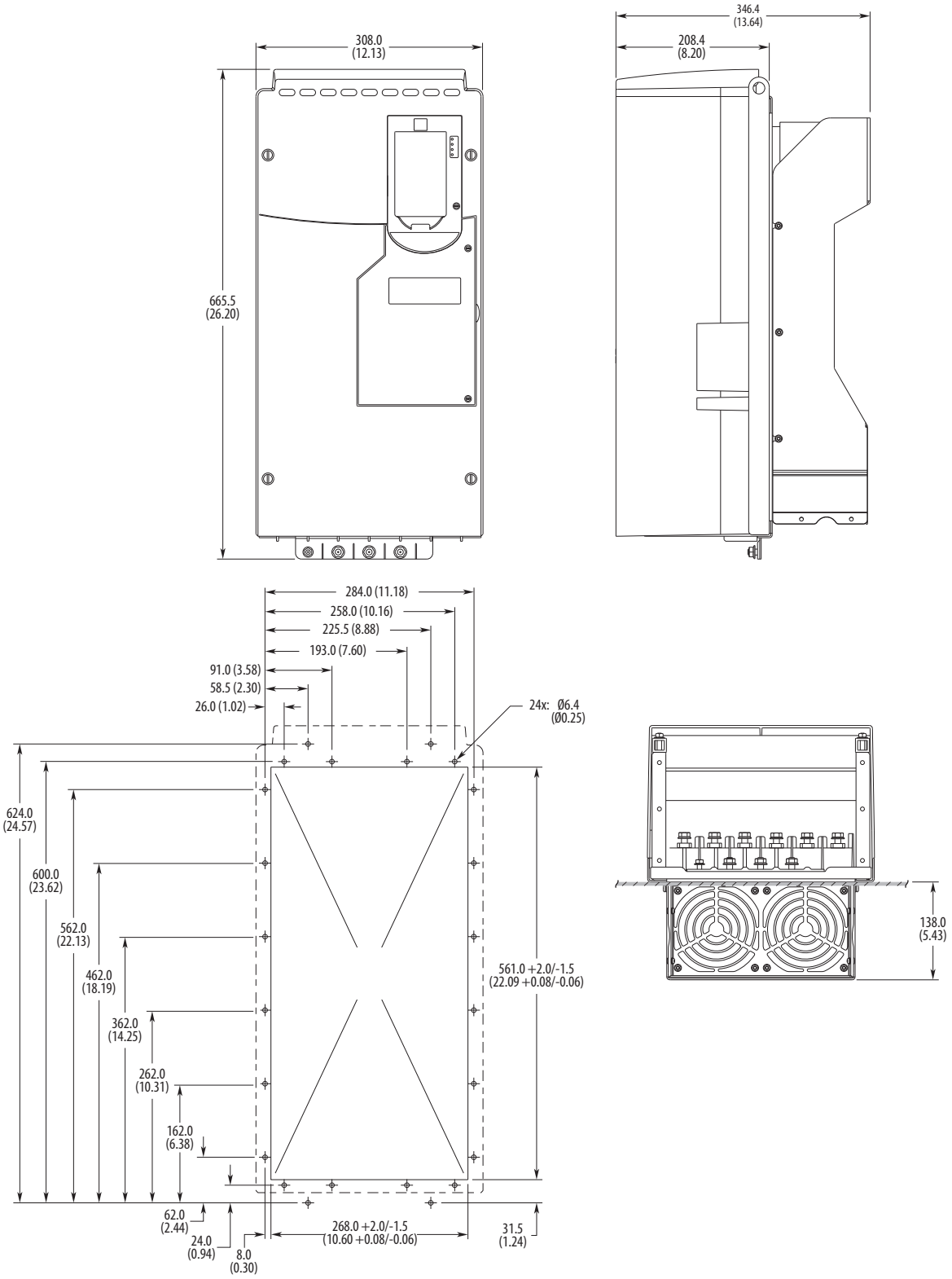

Dimensions are in millimeters and (inches).

IMPORTANT Must use flange adapter kit (catalog number 20-750-FLNG4-F6) to meet enclosure rating.

Figure 37 - NEMA/UL Type 1, Wall Mount Frame 6

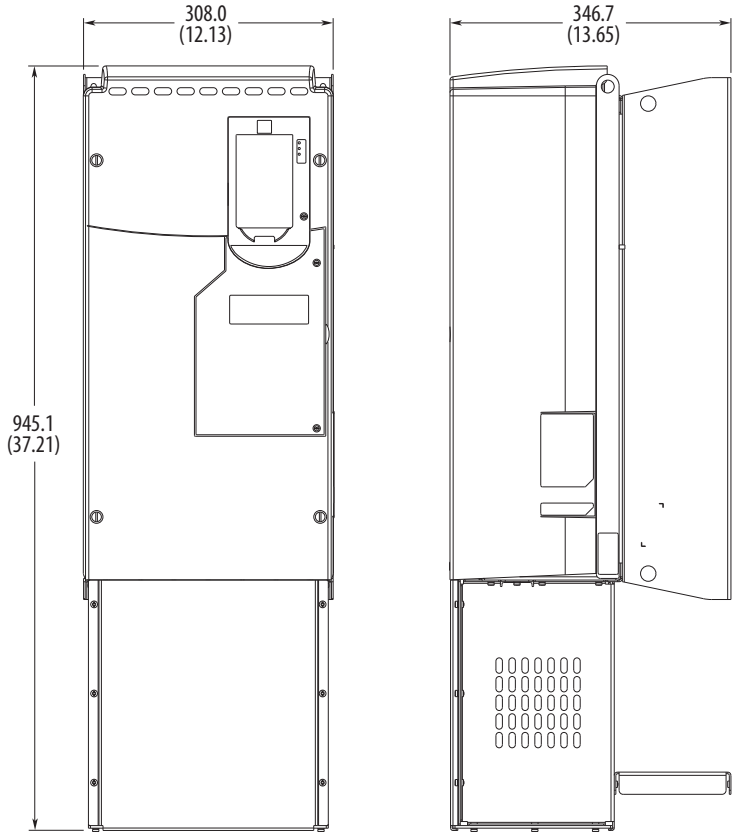

Dimensions are in millimeters and (inches).

IMPORTANT NEMA Type 1 kit (catalog number 20-750-NEMA1-F6) does not change the mounting dimensions in Figure 34.

Figure 38 - IP54, NEMA/UL Type 12, Wall Mount Frame 7

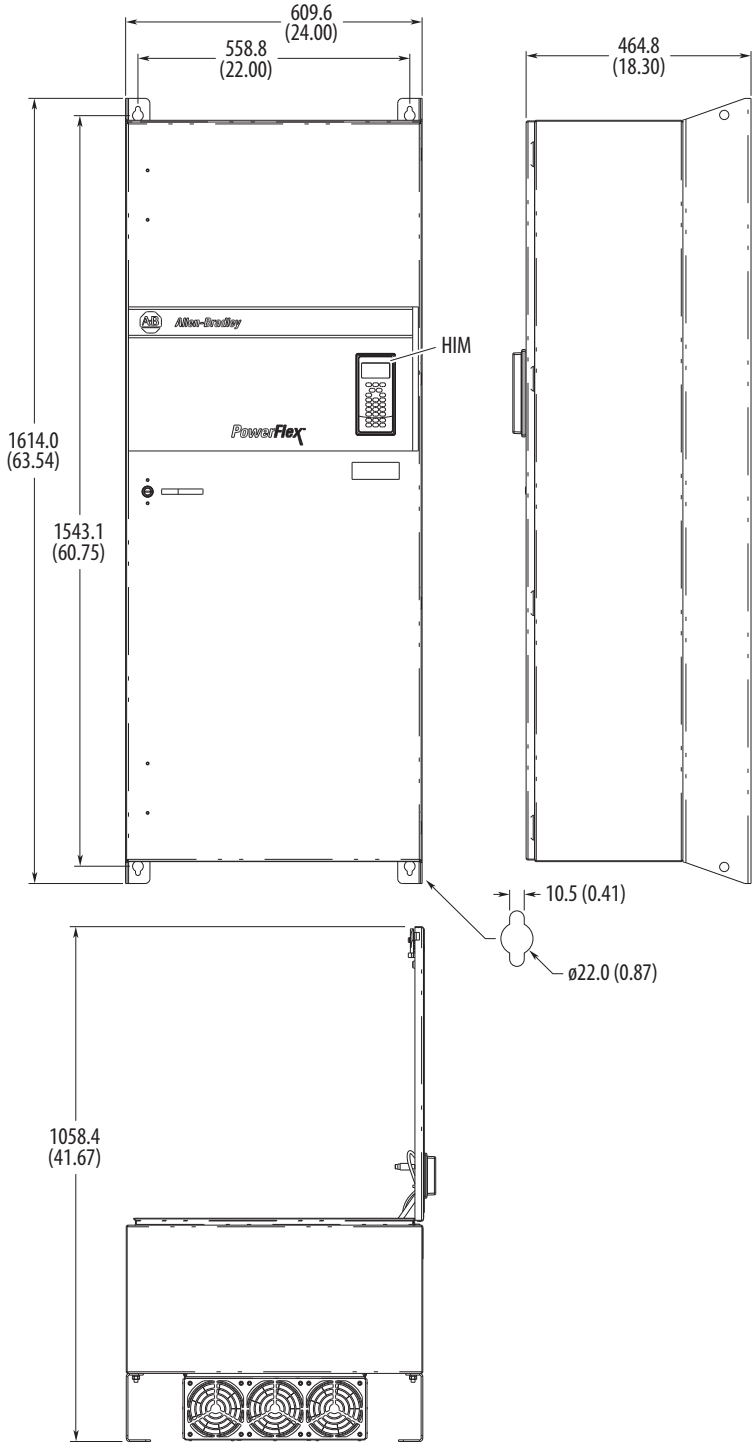

IMPORTANT	Must use human interface module (HIM), catalog number 20-HIM-C6S, to meet enclosure rating.

Dimensions are in millimeters and (inches).

M10 (7/16 in.) mounting hardware recommended.

Figure 39 - Flange Mount, Frame 7

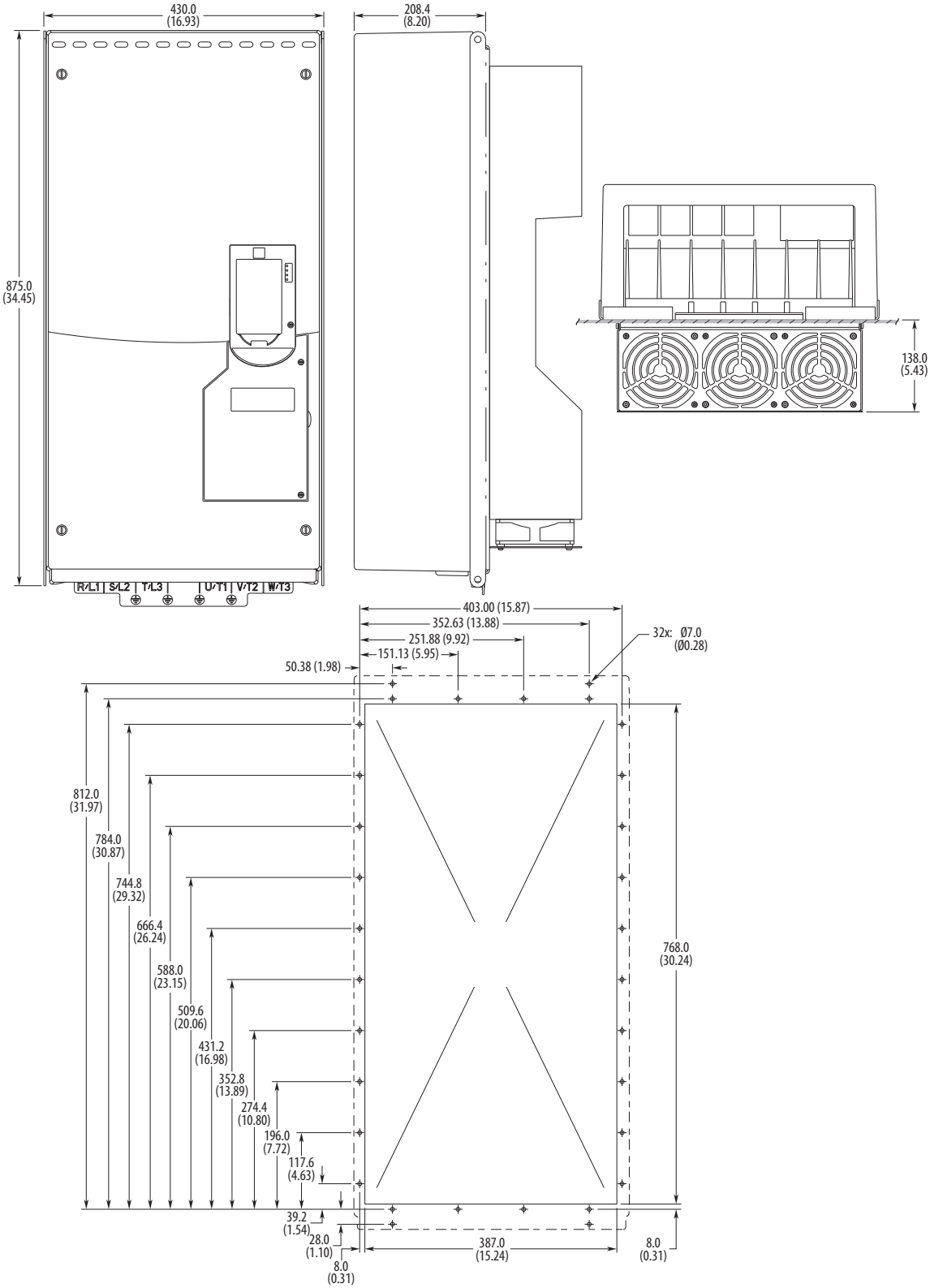

Dimensions are in millimeters and (inches).

IMPORTANT Must use flange adapter kit (catalog number 20-750-FLNG4-F7) to meet enclosure rating.

Figure 40 - NEMA/UL Type 1, Wall Mount Frame 7

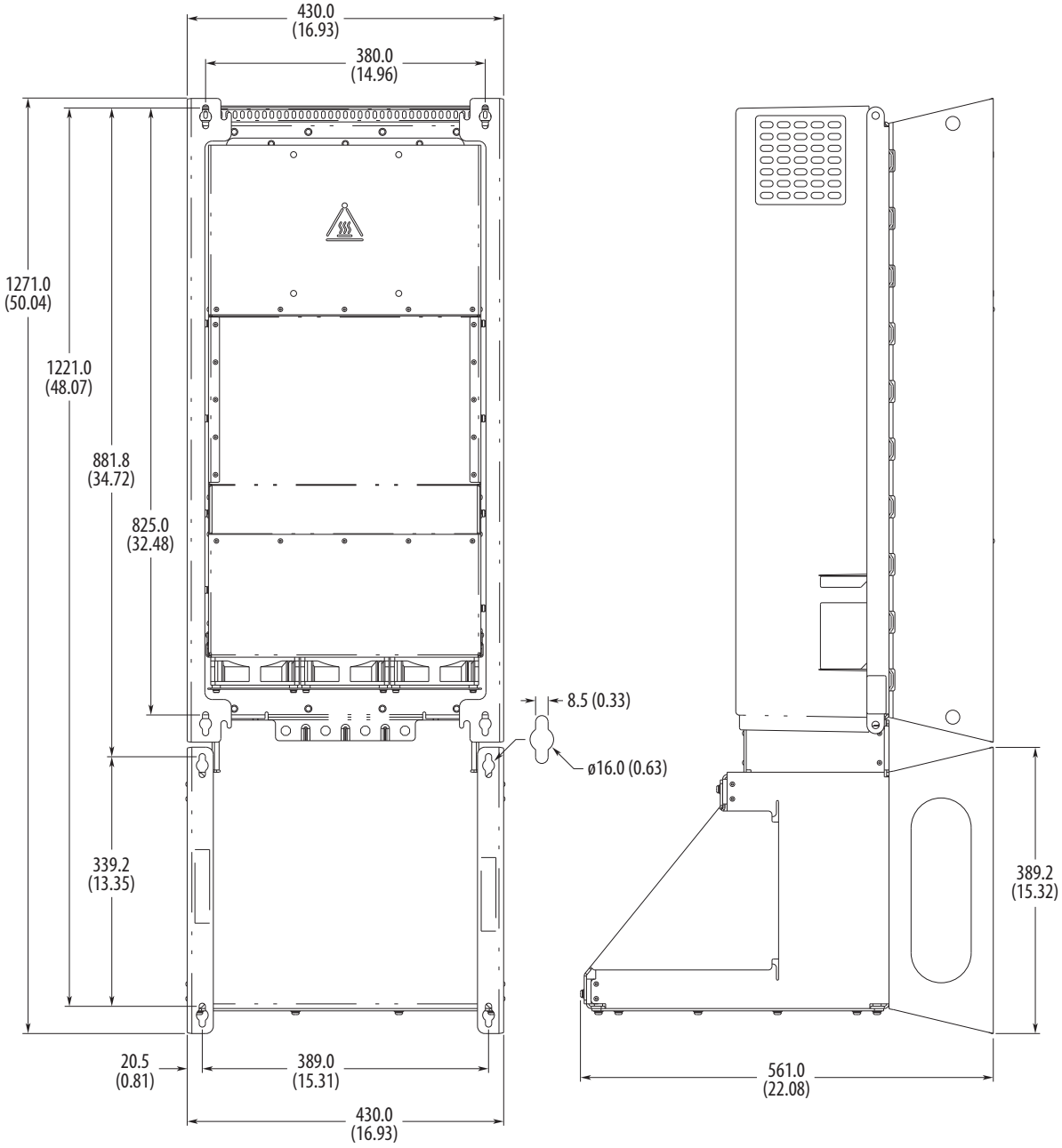

Dimensions are in millimeters and (inches).

M8 (5/16 in.) mounting hardware recommended.

IMPORTANT NEMA Type 1 kit (catalog number 20-750-NEMA1-F7) does change the mounting dimensions in Figure 34.

Figure 41 - IP20, NEMA/UL Type 1, MCC Style Cabinet, Floor Mount Frame 8 (Enclosure Code B)

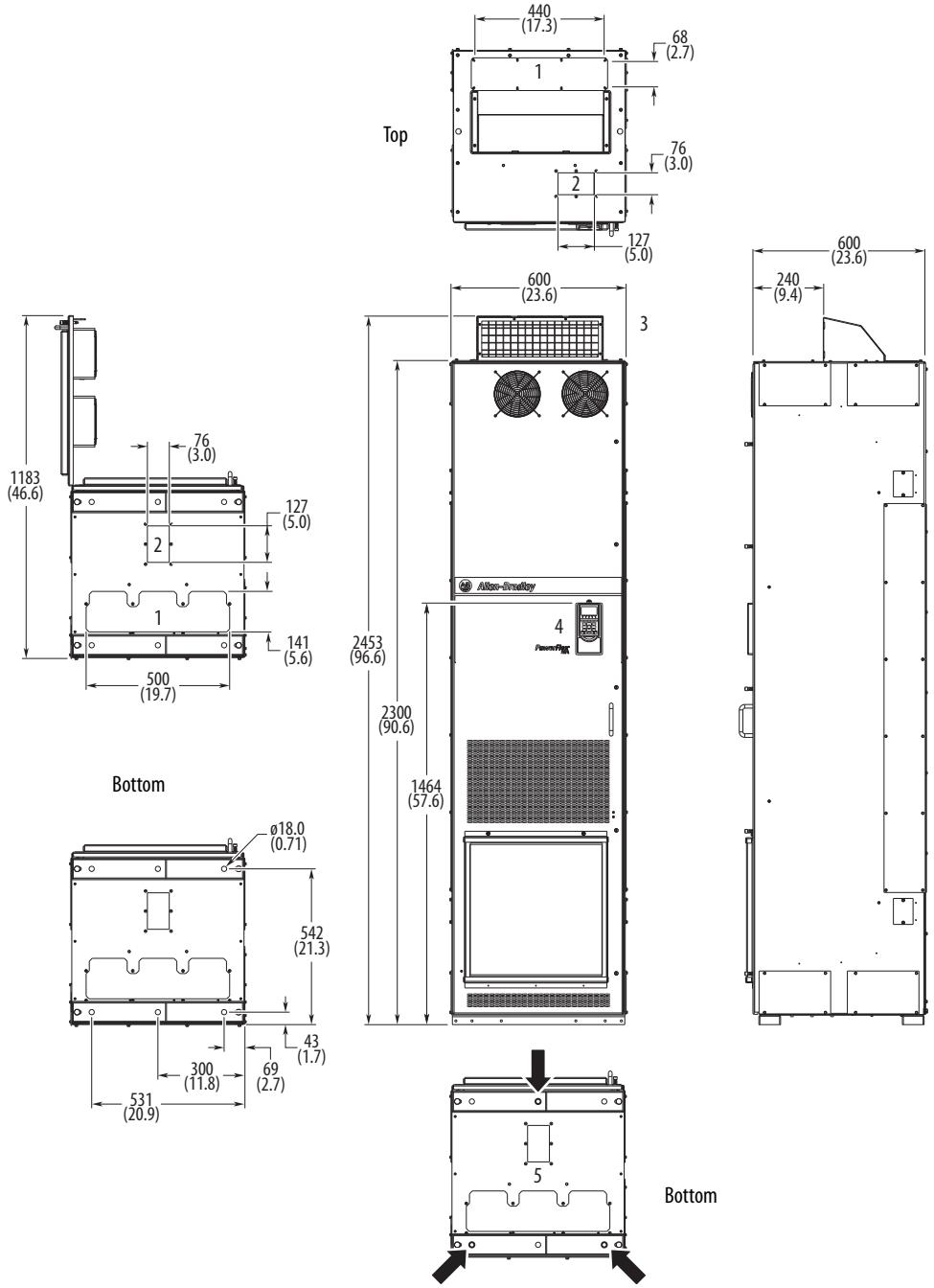

No.	Description
1	Power wiring conduit plates.
2	Control wiring conduit plates.
3	Optional exhaust hood.

No.	Description
4	Optional HIM.
5	Recommended three-hole anchoring.

M12 (1/2 in.) Property Class 8.8 anchor hardware is recommended to fasten the drive cabinet through its internal mounting angle to the foundation. Anchor bolts can be pre-located and embedded in the foundation before instillation.

Figure 42 - IP20, NEMA/UL Type 1, MCC Style Cabinet, Floor Mount Frame 8 (Enclosure Codes L, P, W)

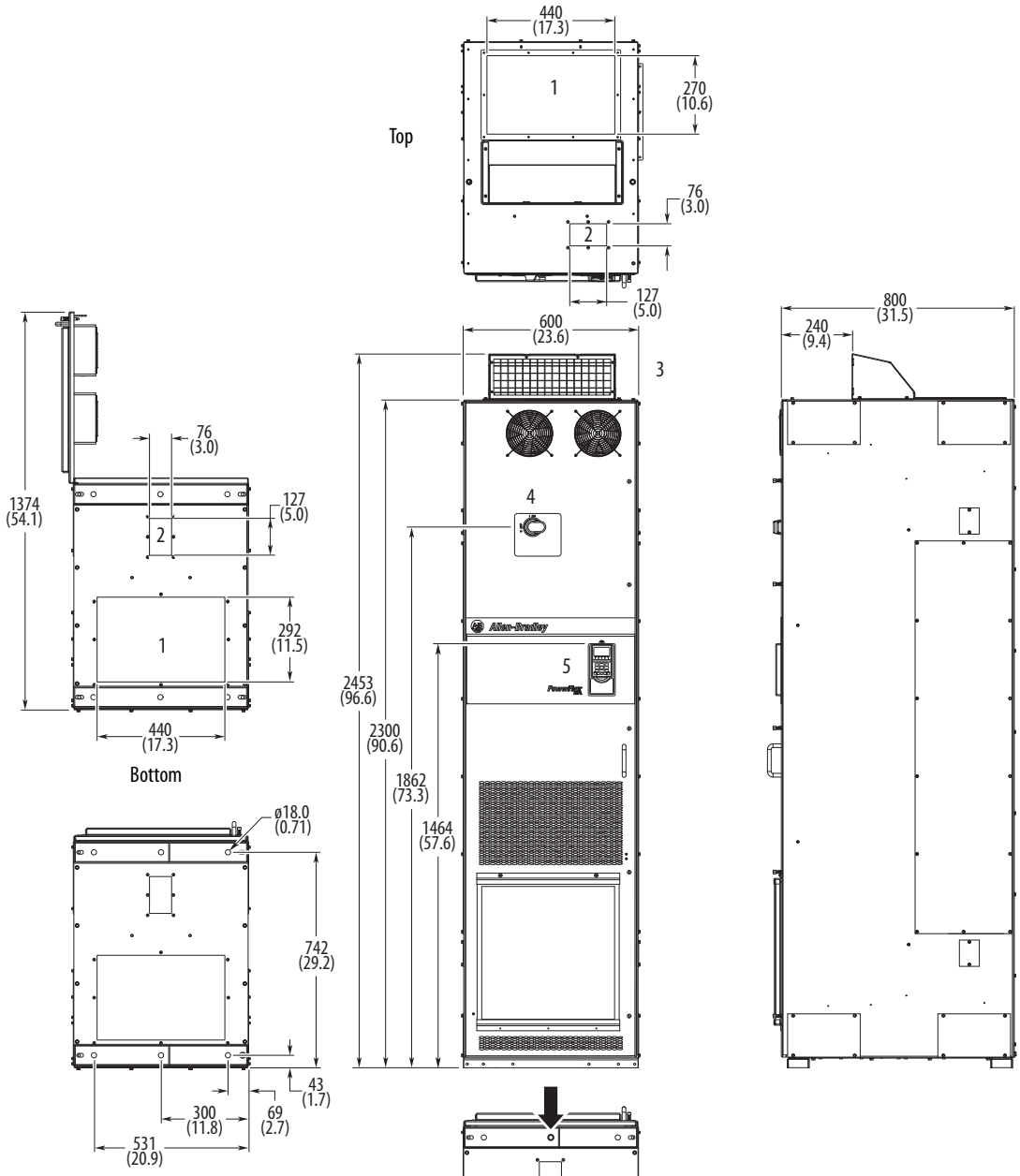

No.	Description
1	Power wiring conduit plates.
2	Control wiring conduit plates.
3	Optional exhaust hood.
4	Disconnect switch (SW2). Common DC input drives.
5	Optional HIM.
6	Recommended three-hole anchoring.

M12 (1/2 in.) Property Class 8.8 anchor hardware is recommended to fasten the drive cabinet through its internal mounting angle to the foundation. Anchor bolts can be pre-located and embedded in the foundation before instillation.

Figure 43 - IP54, NEMA 12, MCC Style Cabinet, Floor Mount Frame 8 (Enclosure Codes K and Y)
IP54, UL Type 12, MCC Style Cabinet, Floor Mount Frame 8 (Enclosure Code J)

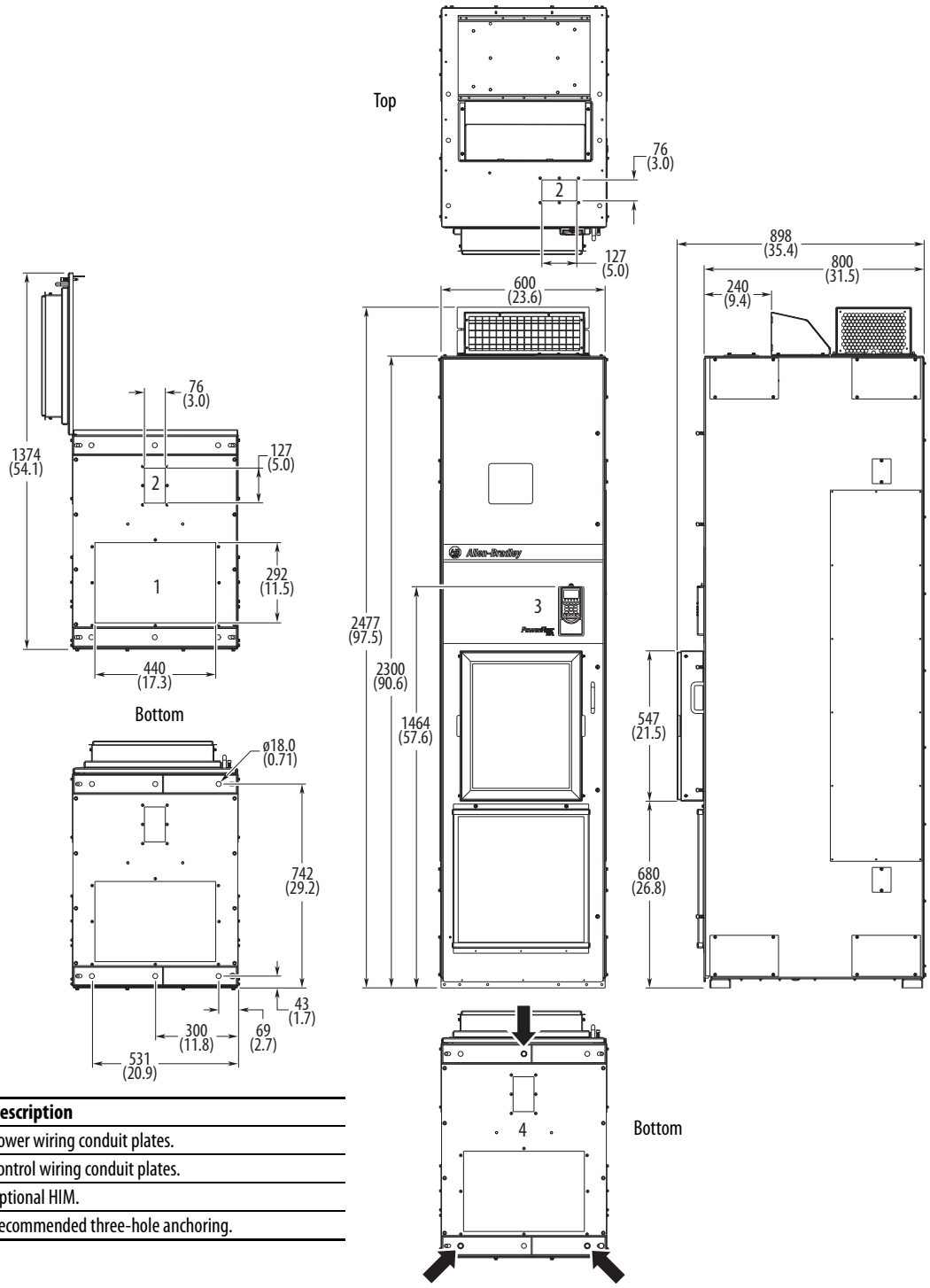

No.	Description
1	Power wiring conduit plates.
2	Control wiring conduit plates.
3	Optional HIM.
4	Recommended three-hole anchoring.

M12 (1/2 in.) Property Class 8.8 anchor hardware is recommended to fasten the drive cabinet through its internal mounting angle to the foundation. Anchor bolts can be pre-located and embedded in the foundation before instillation.

Figure 44 - IP20, NEMA/UL Type 1, MCC Style Cabinet, Floor Mount Frame 9 (Enclosure Code B)

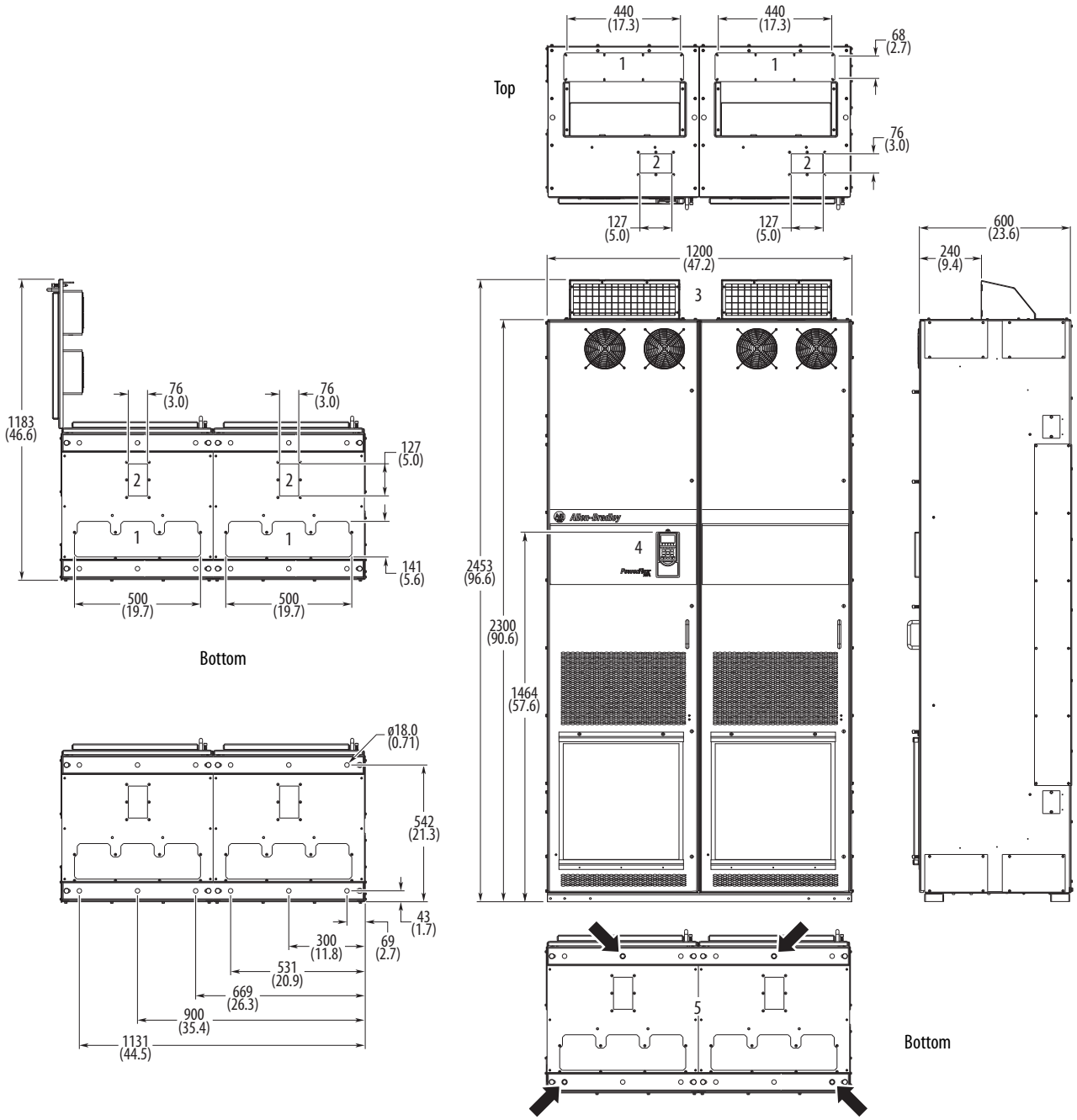

No.	Description
1	Power wiring conduit plates.
2	Control wiring conduit plates.
3	Optional exhaust hood.

No.	Description
4	Optional HIM.
5	Recommended four-hole anchoring.

M12 (1/2 in.) Property Class 8.8 anchor hardware is recommended to fasten the drive cabinet through its internal mounting angle to the foundation. Anchor bolts can be pre-located and embedded in the foundation before instillation.

Figure 45 - IP20, NEMA/UL Type 1, MCC Style Cabinet, Floor Mount Frame 9 (Enclosure Codes L, P, W)

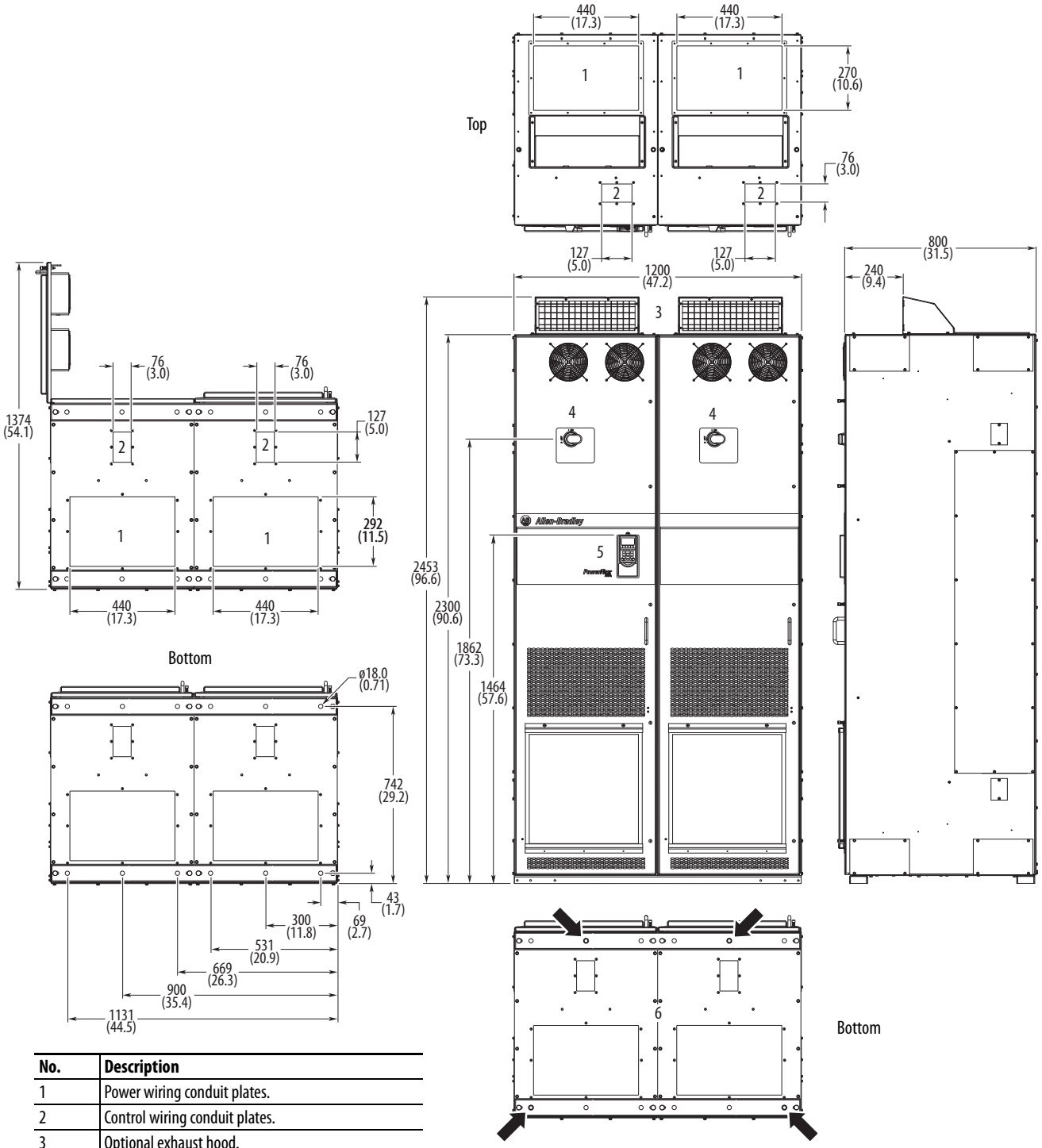

No.	Description
1	Power wiring conduit plates.
2	Control wiring conduit plates.
3	Optional exhaust hood.
4	Disconnect switches (SW2). Common DC input drives.
5	Optional HIM.
6	Recommended four-hole anchoring.

M12 (1/2 in.) Property Class 8.8 anchor hardware is recommended to fasten the drive cabinet through its internal mounting angle to the foundation. Anchor bolts can be pre-located and embedded in the foundation before instillation.

Figure 46 - IP54, NEMA 12, MCC Style Cabinet, Floor Mount Frame 9 (Enclosure Codes K and Y)
IP54, UL Type 12, MCC Style Cabinet, Floor Mount Frame 9 (Enclosure Code J)

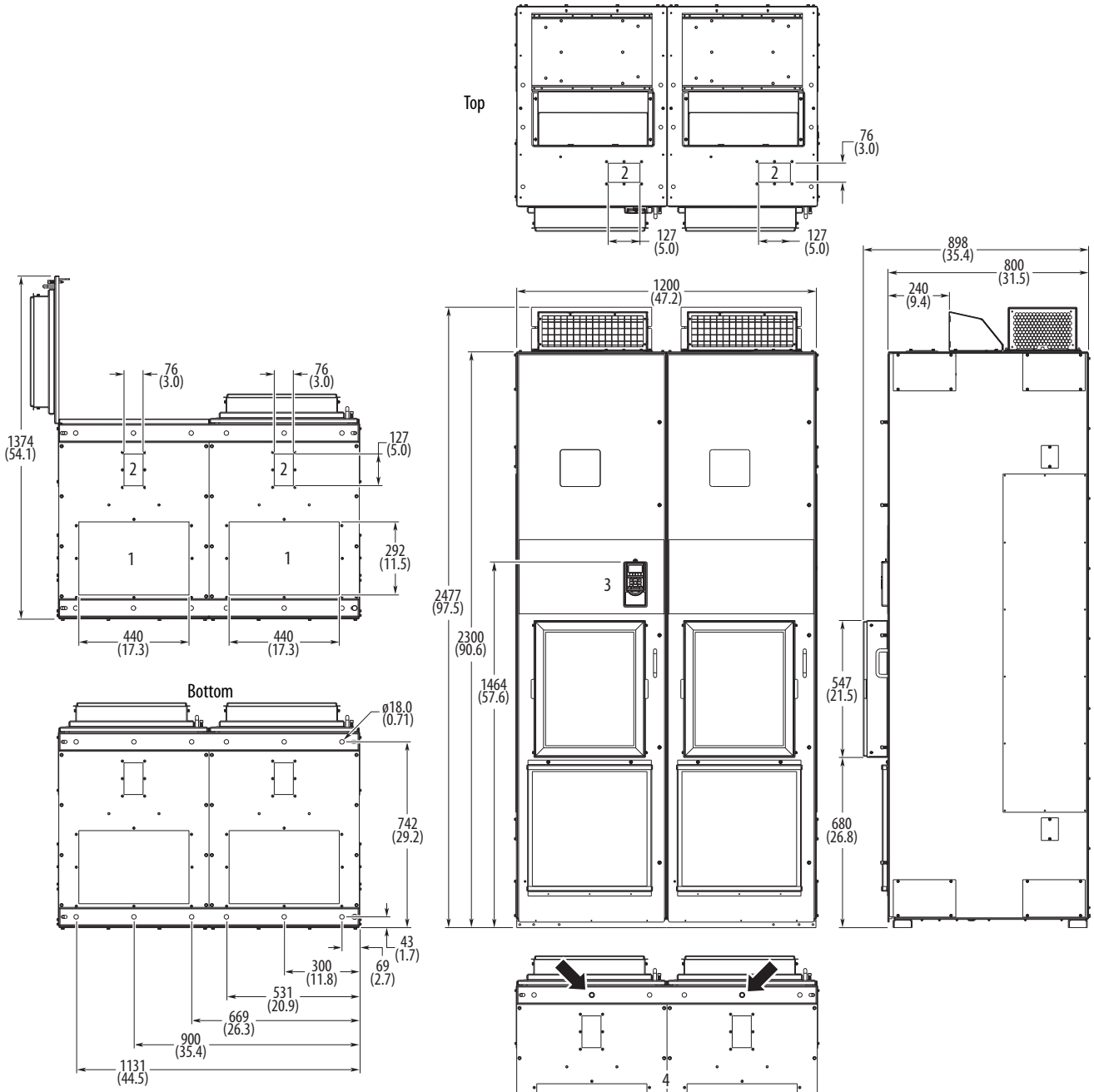

No.	Description
1	Power wiring conduit plates.
2	Control wiring conduit plates.
3	Optional HIM.
4	Recommended four-hole anchoring.

M12 (1/2 in.) Property Class 8.8 anchor hardware is recommended to fasten the drive cabinet through its internal mounting angle to the foundation. Anchor bolts can be pre-located and embedded in the foundation before instillation.

Figure 47 - IP20, NEMA/UL Type 1, MCC Style Cabinet, Floor Mount Frame 10 (Enclosure Code B)

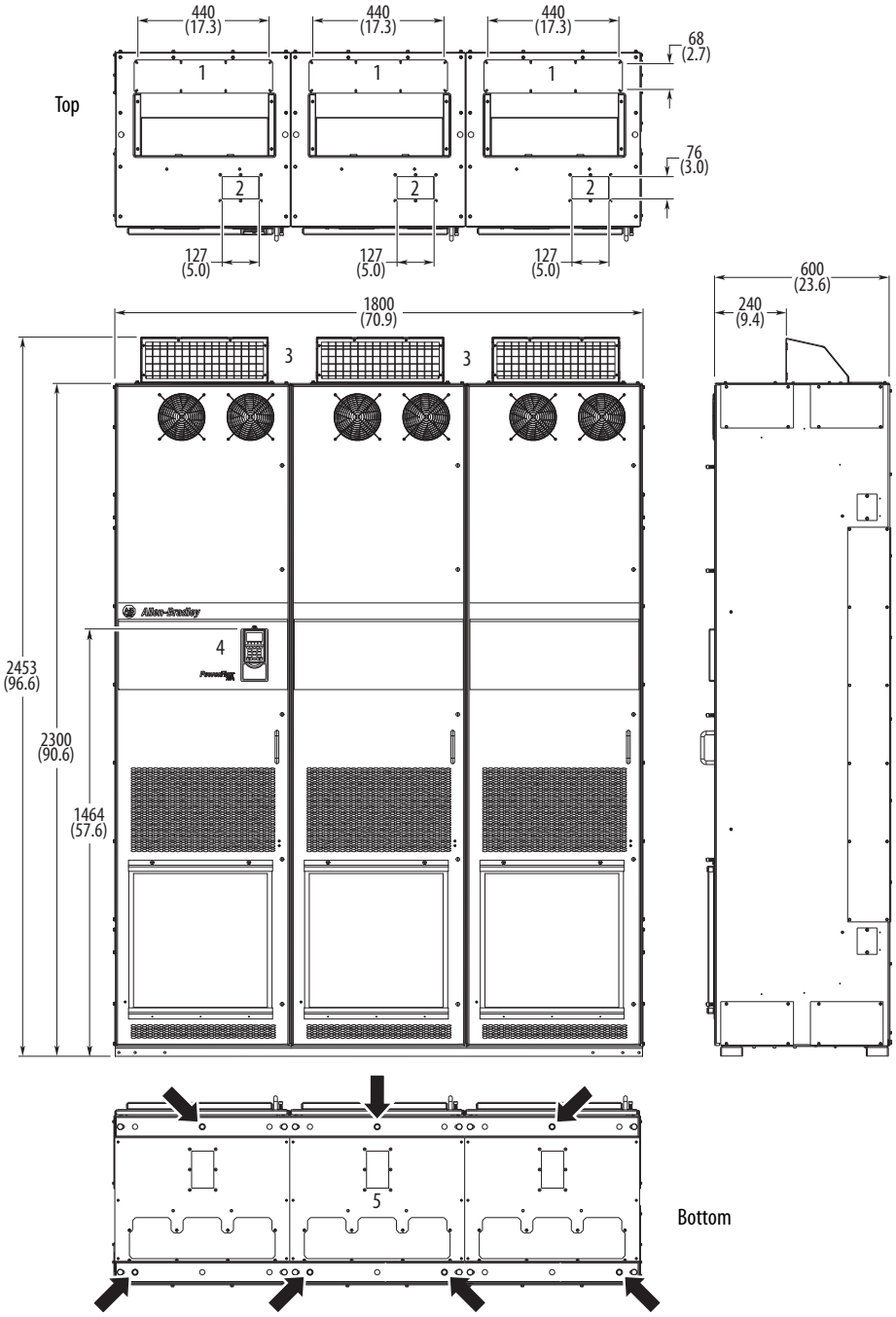

No.	Description
1	Power wiring conduit plates.
2	Control wiring conduit plates.
3	Optional exhaust hood.

No.	Description
4	Optional HIM.
5	Recommended seven-hole anchoring.

M12 (1/2 in.) Property Class 8.8 anchor hardware is recommended to fasten the drive cabinet through its internal mounting angle to the foundation. Anchor bolts can be pre-located and embedded in the foundation before instillation.

Figure 48 - IP20, NEMA/UL Type 1, MCC Style Cabinet, Floor Mount Frame 10 Bottom Access (Enclosure Code B)

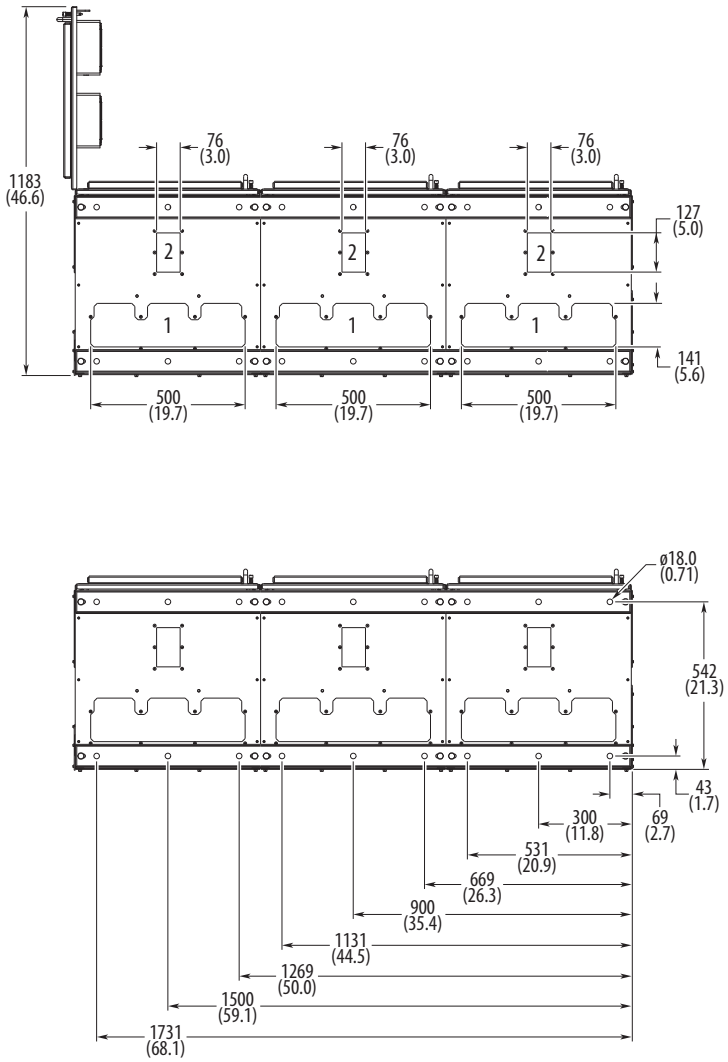

No.	Description
1	Power wiring conduit plates.
2	Control wiring conduit plates.

Figure 49 - IP20, NEMA/UL Type 1, MCC Style Cabinet, Floor Mount Frame 10 (Enclosure Codes L, P, W)

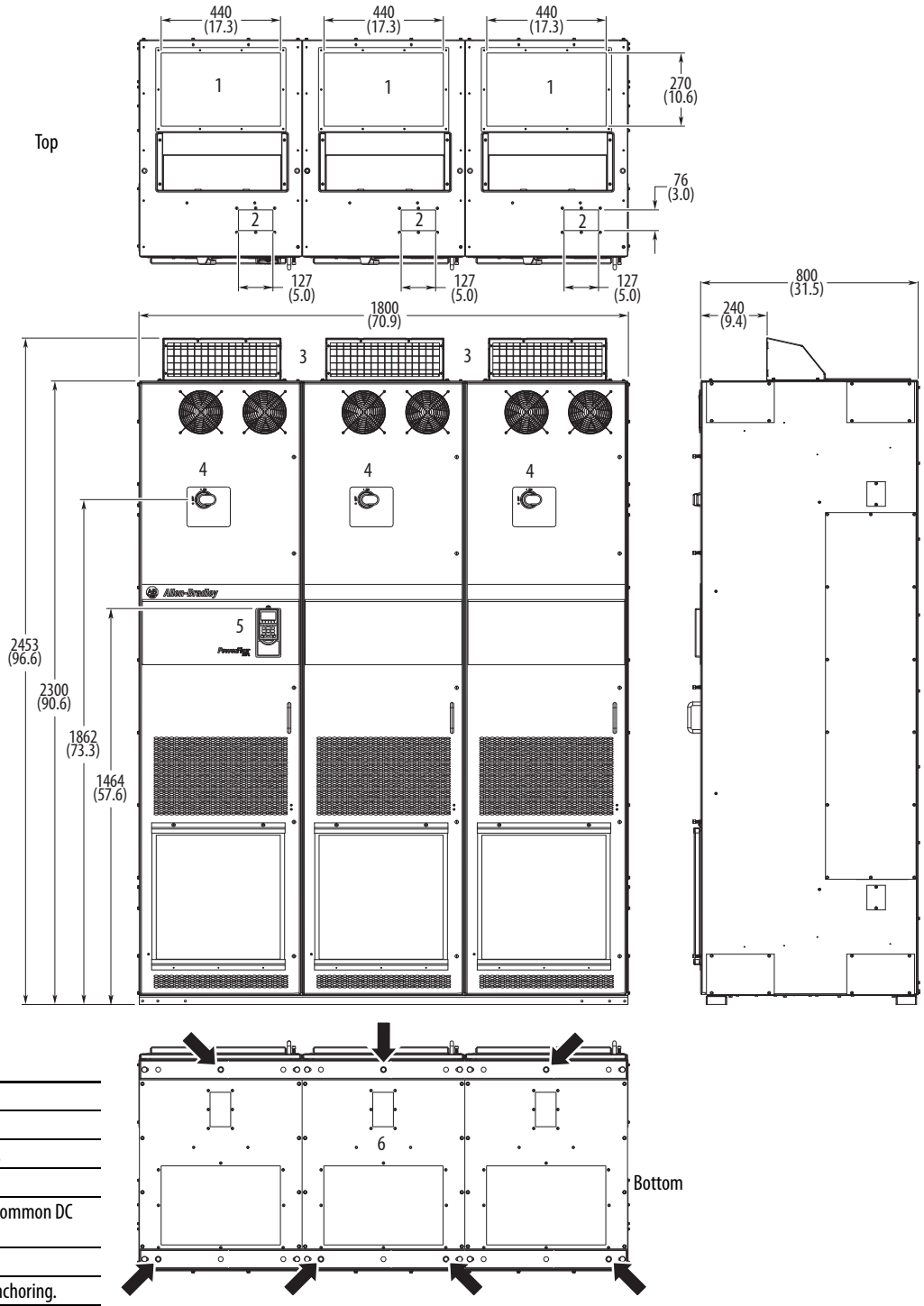

No.	Description
1	Power wiring conduit plates.
2	Control wiring conduit plates.
3	Optional exhaust hood.
4	Disconnect switches (SW2). Common DC input drives.
5	Optional HIM.
6	Recommended seven-hole anchoring.

M12 (1/2 in.) Property Class 8.8 anchor hardware is recommended to fasten the drive cabinet through its internal mounting angle to the foundation. Anchor bolts can be pre-located and embedded in the foundation before instillation.

Figure 50 - IP20, NEMA/UL Type 1, MCC Style Cabinet, Floor Mount Frame 10 Bottom Access (Enclosure Codes L, P, W)

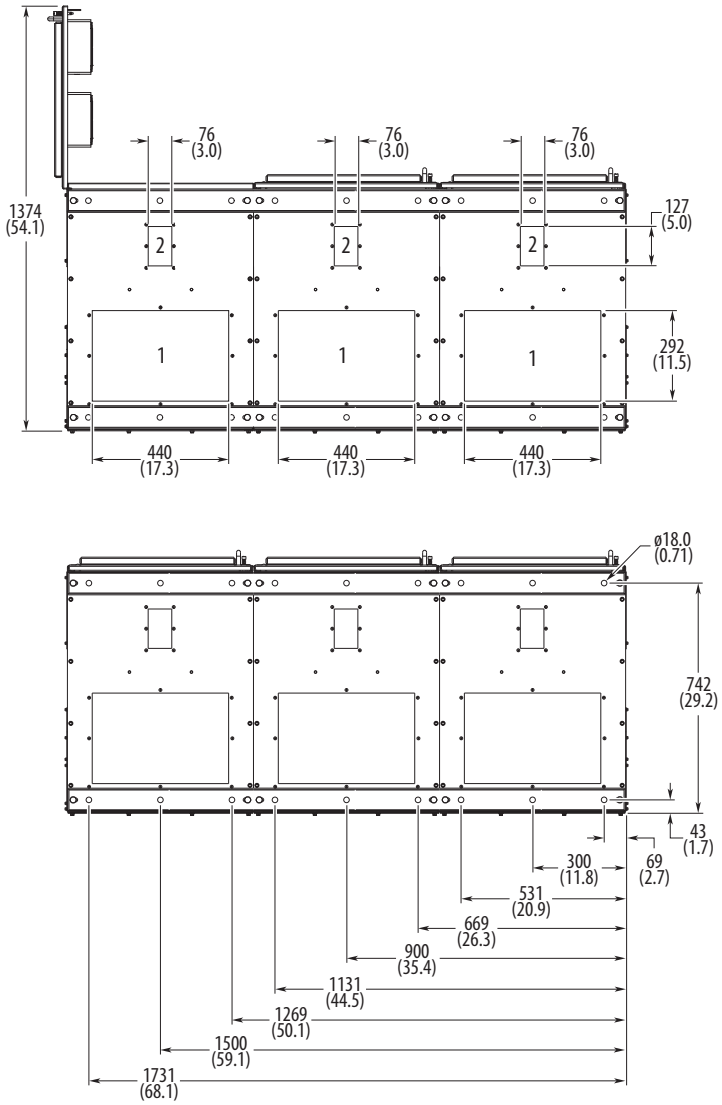

No.	Description
1	Power wiring conduit plates.
2	Control wiring conduit plates.

Figure 51 - IP54, NEMA 12, MCC Style Cabinet, Floor Mount Frame 10 (Enclosure Codes K and Y)
IP54, UL Type 12, MCC Style Cabinet, Floor Mount Frame 10 (Enclosure Code J)

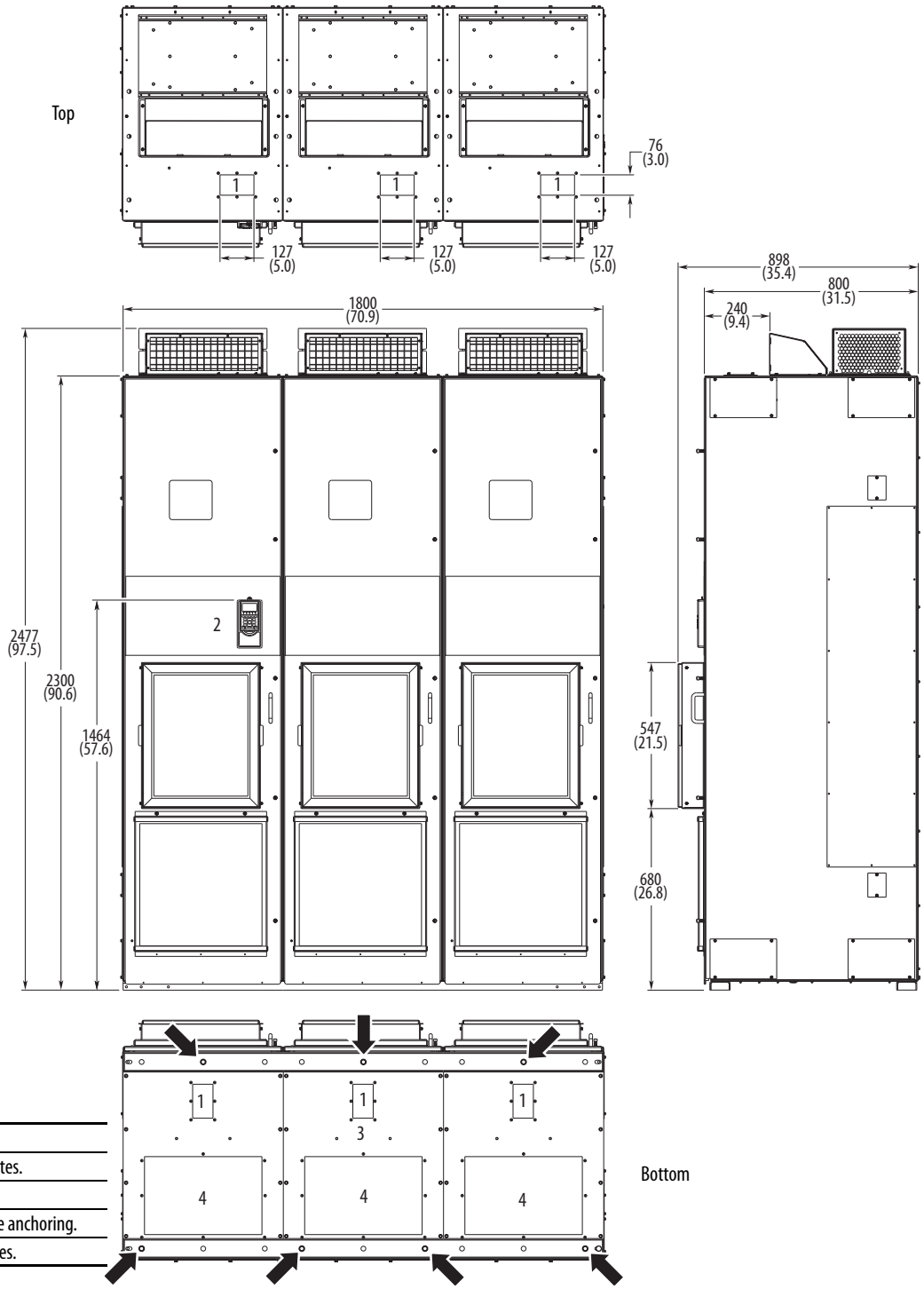

No.	Description
1	Control wiring conduit plates.
2	Optional HIM.
3	Recommended seven-hole anchoring.
4	Power wiring conduit plates.

M12 (1/2 in.) Property Class 8.8 anchor hardware is recommended to fasten the drive cabinet through its internal mounting angle to the foundation. Anchor bolts can be pre-located and embedded in the foundation before instillation.

Figure 52 - IP54, NEMA 12, MCC Style Cabinet, Floor Mount Frame 10 Bottom Access (Enclosure Codes K and Y)
IP54, UL Type 12, MCC Style Cabinet, Floor Mount Frame 10 Bottom Access (Enclosure Code J)

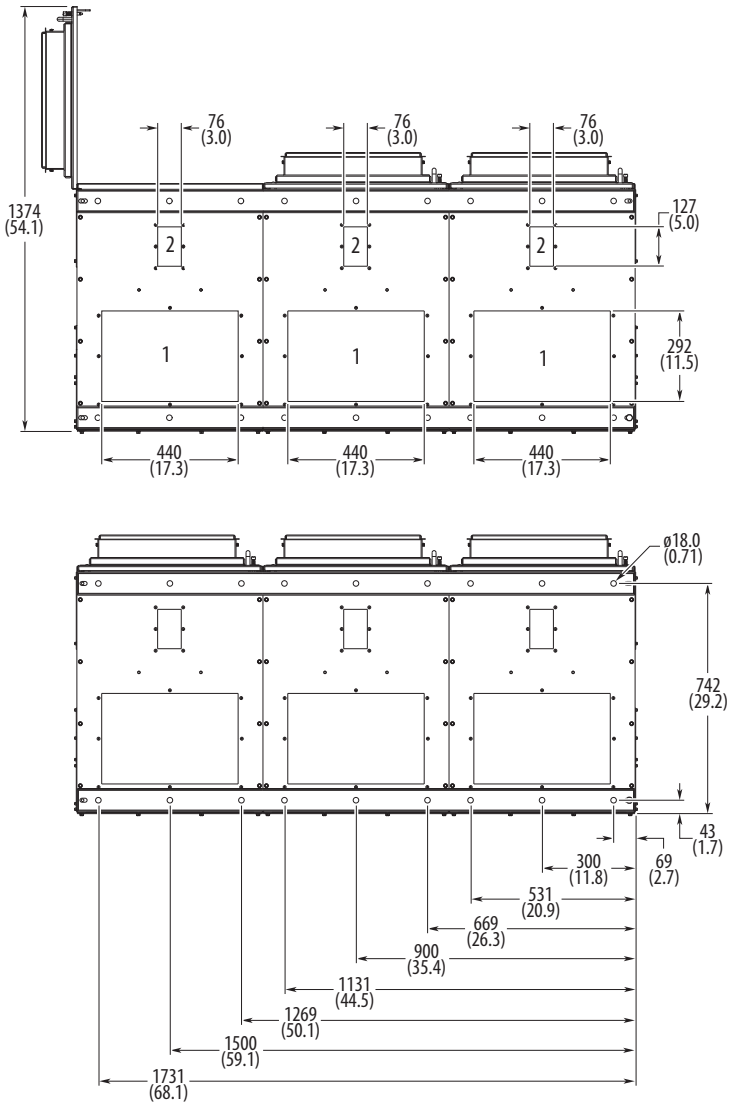

No.	Description
1	Power wiring conduit plates.
2	Control wiring conduit plates.

Approximate Dimensions – Floor Mount Drives with Cabinet Options

See Table 10 for an index of dimension drawings for floor mount drives with cabinet options.

Table 10 - Dimension Drawing Index

Frame	Description	Page
8	IP20, NEMA/UL Type 1, MCC style cabinet with cabinet options bay, 600 mm (23.6 in.) deep	89
	IP20, NEMA/UL Type 1, MCC style cabinet with wiring bay, 600 mm (23.6 in.) deep	90
	IP20, NEMA/UL Type 1, MCC style cabinet with wiring bay and cabinet options bay, 600 mm (23.6 in.) deep	91
	IP20, NEMA/UL Type 1, MCC style cabinet with wiring bay and cabinet options bay, 600 mm (23.6 in.) deep, bottom access	92
	IP20, NEMA/UL Type 1, MCC style cabinet with cabinet options bay, 800 mm (31.5 in.) deep	93
	IP20, NEMA/UL Type 1, MCC style cabinet with wiring bay, 800 mm (31.5 in.) deep	94
	IP20, NEMA/UL Type 1, MCC style cabinet with wiring bay and cabinet options bay, 800 mm (31.5 in.) deep	95
	IP20, NEMA/UL Type 1, MCC style cabinet with wiring bay and cabinet options bay, 800 mm (31.5 in.) deep, bottom access	96
	IP54, NEMA 12/UL Type 12, MCC style cabinet with cabinet options bay, 800 mm (31.5 in.) deep	97
	IP54, NEMA 12/UL Type 12, MCC style cabinet with cabinet options bay, 800 mm (31.5 in.) deep, bottom access	98
	IP54, NEMA 12/UL Type 12, MCC style cabinet with wiring bay, 800 mm (31.5 in.) deep	99
	IP54, NEMA 12/UL Type 12, MCC style cabinet with wiring bay, 800 mm (31.5 in.) deep, bottom access	100
	IP54, NEMA 12/UL Type 12, MCC style cabinet with wiring bay and cabinet options bay, 800 mm (31.5 in.) deep	101
	IP54, NEMA 12/UL Type 12, MCC style cabinet with wiring bay and cabinet options bay, 800 mm (31.5 in.) deep, bottom access	102
9	IP20, NEMA/UL Type 1, MCC style cabinet with cabinet options bay, 600 mm (23.6 in.) deep	103
	IP20, NEMA/UL Type 1, MCC style cabinet with cabinet options bay, 600 mm (23.6 in.) deep, bottom access	104
	IP20, NEMA/UL Type 1, MCC style cabinet with wiring bay, 600 mm (23.6 in.) deep	105
	IP20, NEMA/UL Type 1, MCC style cabinet with wiring bay, 600 mm (23.6 in.) deep, bottom access	106
	IP20, NEMA/UL Type 1, MCC style cabinet with cabinet options bay and wiring bay, 600 mm (23.6 in.) deep	107
	IP20, NEMA/UL Type 1, MCC style cabinet with cabinet options bay and wiring bay, 600 mm (23.6 in.) deep, bottom access	108
	IP20, NEMA/UL Type 1, MCC style cabinet with cabinet options bay, 800 mm (31.5 in.) deep	109
	IP20, NEMA/UL Type 1, MCC style cabinet with cabinet options bay, 800 mm (31.5 in.) deep, bottom access	110
	IP20, NEMA/UL Type 1, MCC style cabinet with wiring bay, 800 mm (31.5 in.) deep	111
	IP20, NEMA/UL Type 1, MCC style cabinet with wiring bay, 800 mm (31.5 in.) deep, bottom access	112
	IP20, NEMA/UL Type 1, MCC style cabinet with cabinet options bay and wiring bay, 800 mm (31.5 in.) deep	113
	IP20, NEMA/UL Type 1, MCC style cabinet with cabinet options bay and wiring bay, 800 mm (31.5 in.) deep, bottom access	114
	IP54, NEMA 12/UL Type 12, MCC style cabinet with cabinet options bay, 800 mm (31.5 in.) deep	115
	IP54, NEMA 12/UL Type 12, MCC style cabinet with cabinet options bay, 800 mm (31.5 in.) deep, bottom access	116
	IP54, NEMA 12/UL Type 12, MCC style cabinet with wiring bay, 800 mm (31.5 in.) deep	117
	IP54, NEMA 12/UL Type 12, MCC style cabinet with wiring bay, 800 mm (31.5 in.) deep, bottom access	118
	IP54, NEMA 12/UL Type 12, MCC style cabinet with cabinet options bay and wiring bay, 800 mm (31.5 in.) deep	119
	IP54, NEMA 12/UL Type 12, MCC style cabinet with cabinet options bay and wiring bay, 800 mm (31.5 in.) deep, bottom access	120

Figure 53 - IP20, NEMA/UL Type 1, MCC Style Cabinet, Floor Mount Frame 8 (Enclosure Code B)

600 mm (23.6 in.) Deep Drive with Cabinet Options Bay

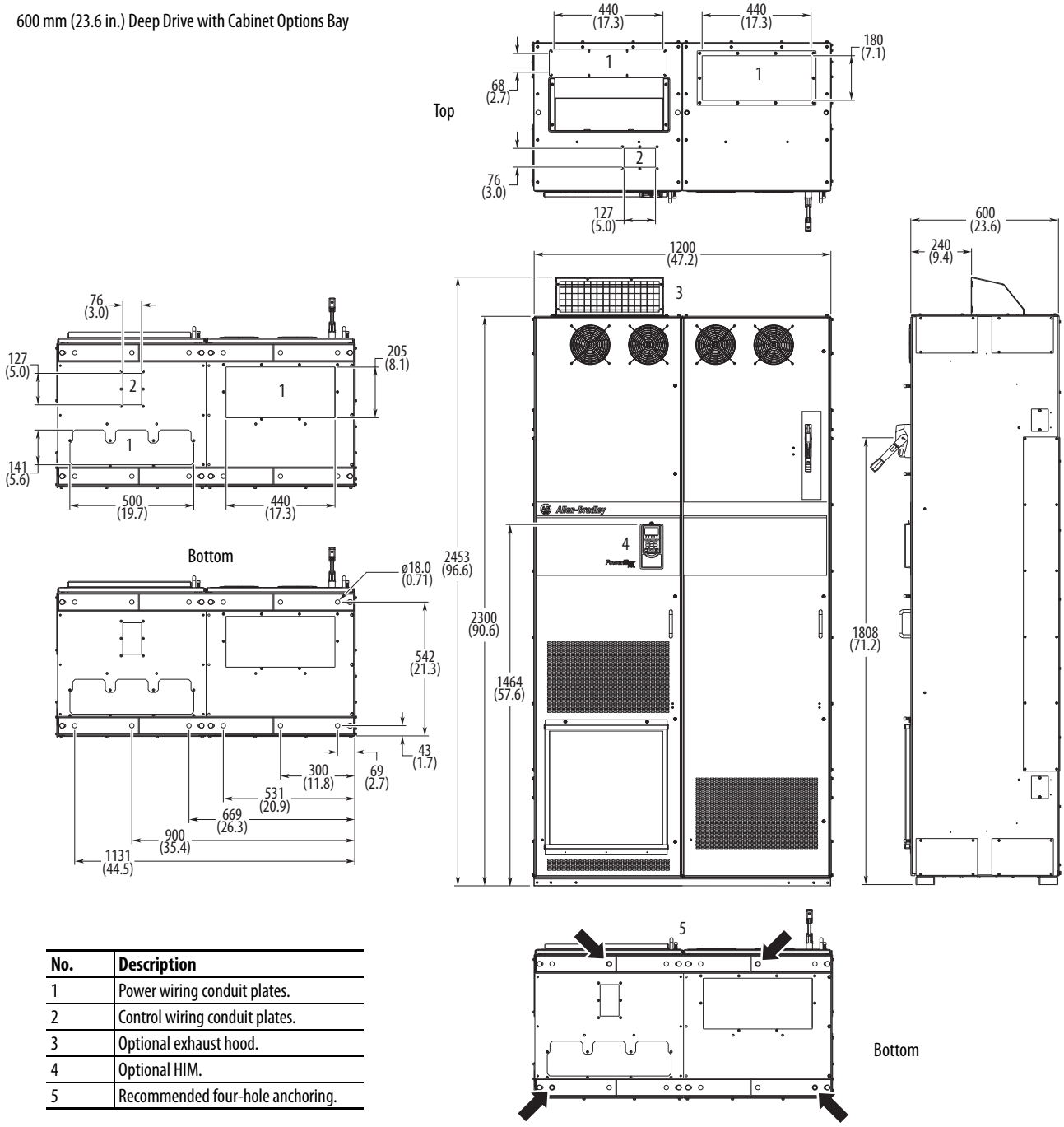

No.	Description
1	Power wiring conduit plates.
2	Control wiring conduit plates.
3	Optional exhaust hood.
4	Optional HIM.
5	Recommended four-hole anchoring.

M12 (1/2 in.) Property Class 8.8 anchor hardware is recommended to fasten the drive cabinet through its internal mounting angle to the foundation. Anchor bolts can be pre-located and embedded in the foundation before instillation.

Figure 54 - IP20, NEMA/UL Type 1, MCC Style Cabinet, Floor Mount Frame 8 (Enclosure Code B with P14)

600 mm (23.6 in.) Deep Drive with Wiring Bay

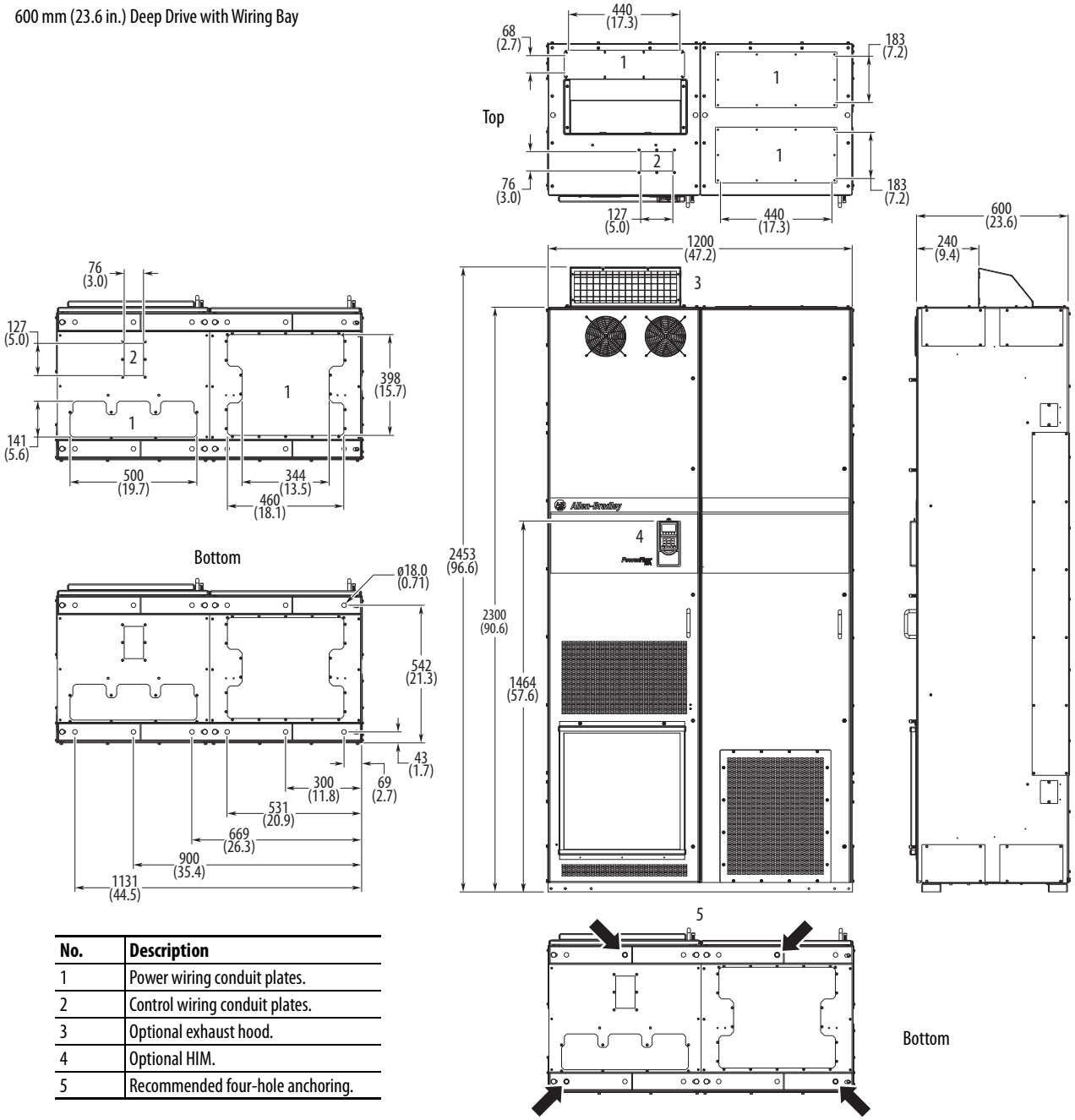

No.	Description
1	Power wiring conduit plates.
2	Control wiring conduit plates.
3	Optional exhaust hood.
4	Optional HIM.
5	Recommended four-hole anchoring.

M12 (1/2 in.) Property Class 8.8 anchor hardware is recommended to fasten the drive cabinet through its internal mounting angle to the foundation. Anchor bolts can be pre-located and embedded in the foundation before instillation.

Figure 55 - IP20, NEMA/UL Type 1, MCC Style Cabinet, Floor Mount Frame 8 (Enclosure Code B)

600 mm (23.6 in.) Deep Drive with Wiring Bay and Cabinet Options Bay

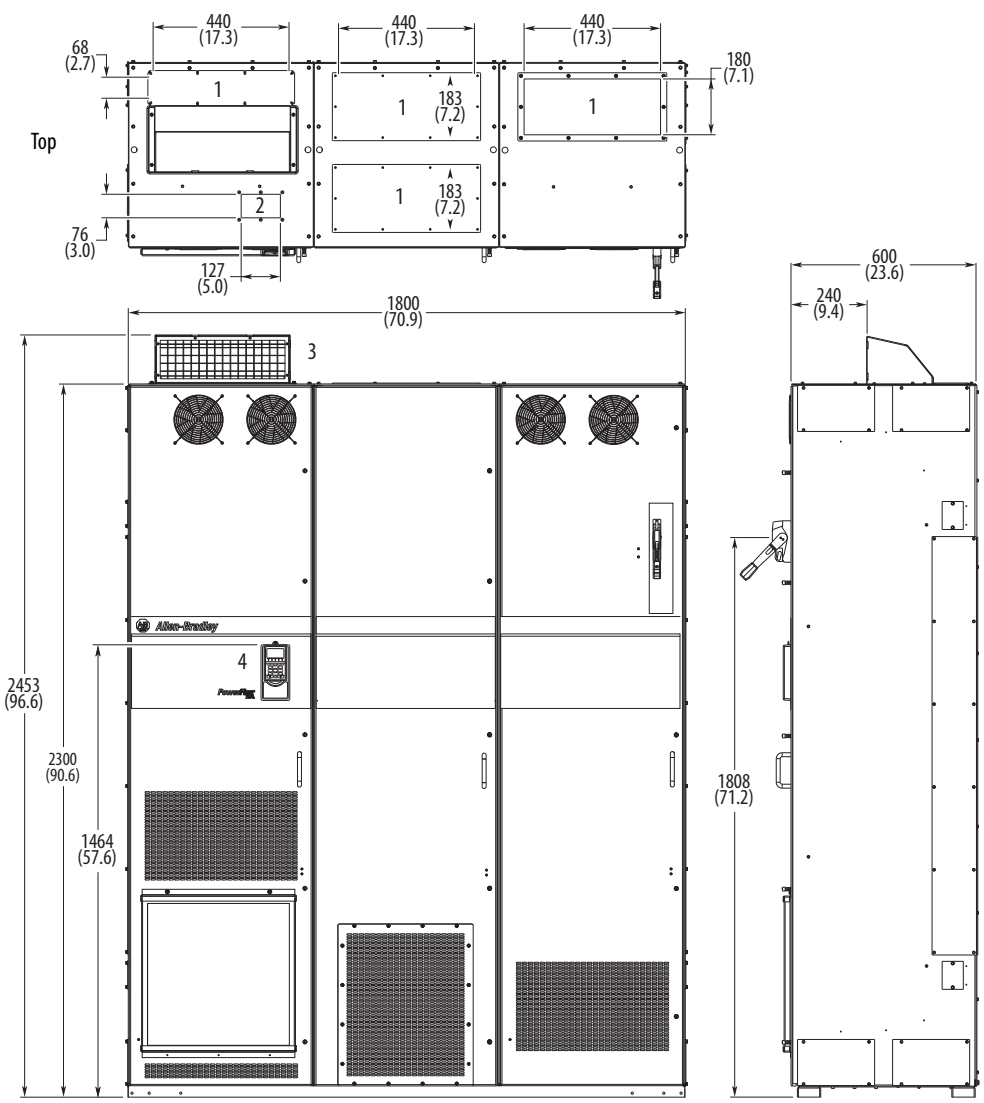

No.	Description
1	Power wiring conduit plates.
2	Control wiring conduit plates.
3	Optional exhaust hood.
4	Optional HIM.
5	Recommended seven-hole anchoring.

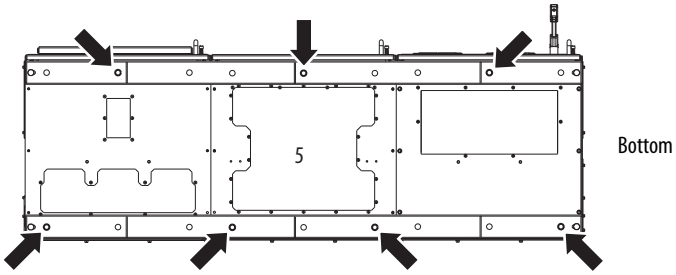

M12 (1/2 in.) Property Class 8.8 anchor hardware is recommended to fasten the drive cabinet through its internal mounting angle to the foundation. Anchor bolts can be pre-located and embedded in the foundation before instillation.

600 mm (23.6 in.) Deep Drive with Wiring Bay and Cabinet Options Bay

Figure 56 - IP20, NEMA/UL Type 1, MCC Style Cabinet, Floor Mount Frame 8 Bottom Access (Enclosure Code B)

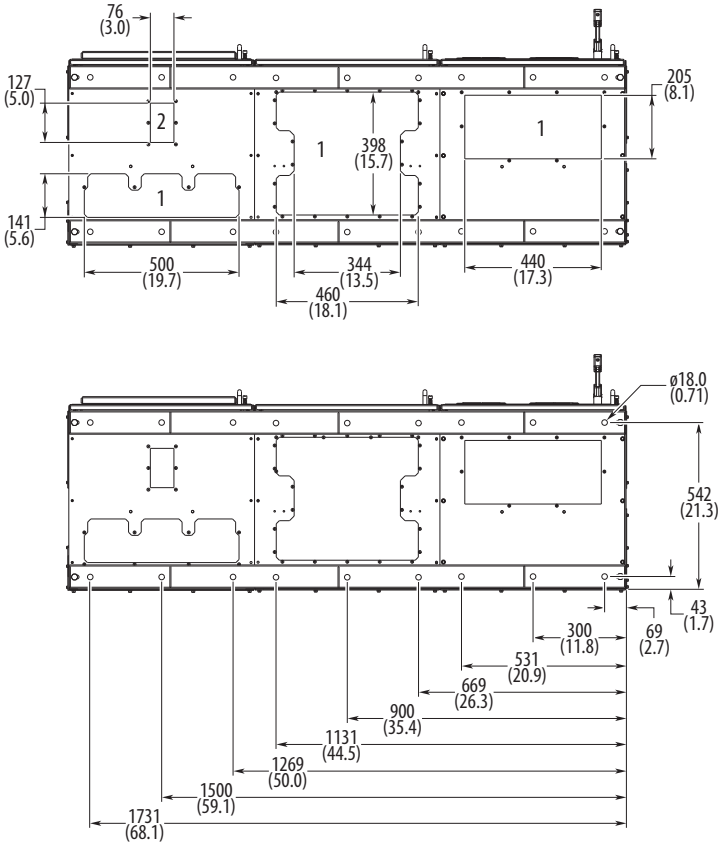

No.	Description
1	Power wiring conduit plates.
2	Control wiring conduit plates.

Figure 57 - IP20, NEMA/UL Type 1, MCC Style Cabinet, Floor Mount Frame 8 (Enclosure Code L, P, W)

800 mm (31.5 in.) Deep Drive with Cabinet Options Bay

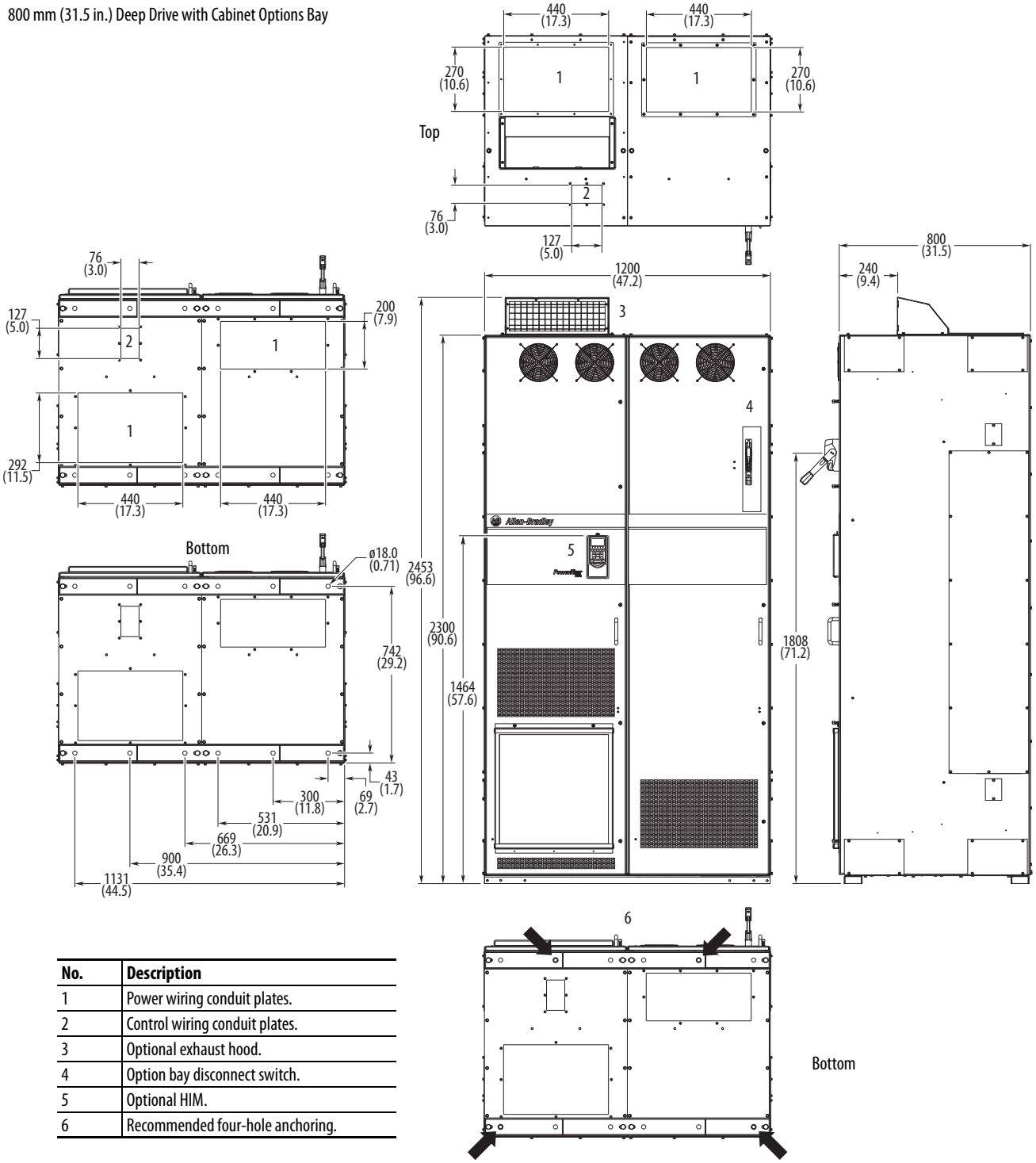

No.	Description
1	Power wiring conduit plates.
2	Control wiring conduit plates.
3	Optional exhaust hood.
4	Option bay disconnect switch.
5	Optional HIM.
6	Recommended four-hole anchoring.

M12 (1/2 in.) Property Class 8.8 anchor hardware is recommended to fasten the drive cabinet through its internal mounting angle to the foundation. Anchor bolts can be pre-located and embedded in the foundation before instillation.

Figure 58 - IP20, NEMA/UL Type 1, MCC Style Cabinet, Floor Mount Frame 8 (Enclosure Code L, P, W)

800 mm (31.5 in.) Deep Drive with Wiring Bay

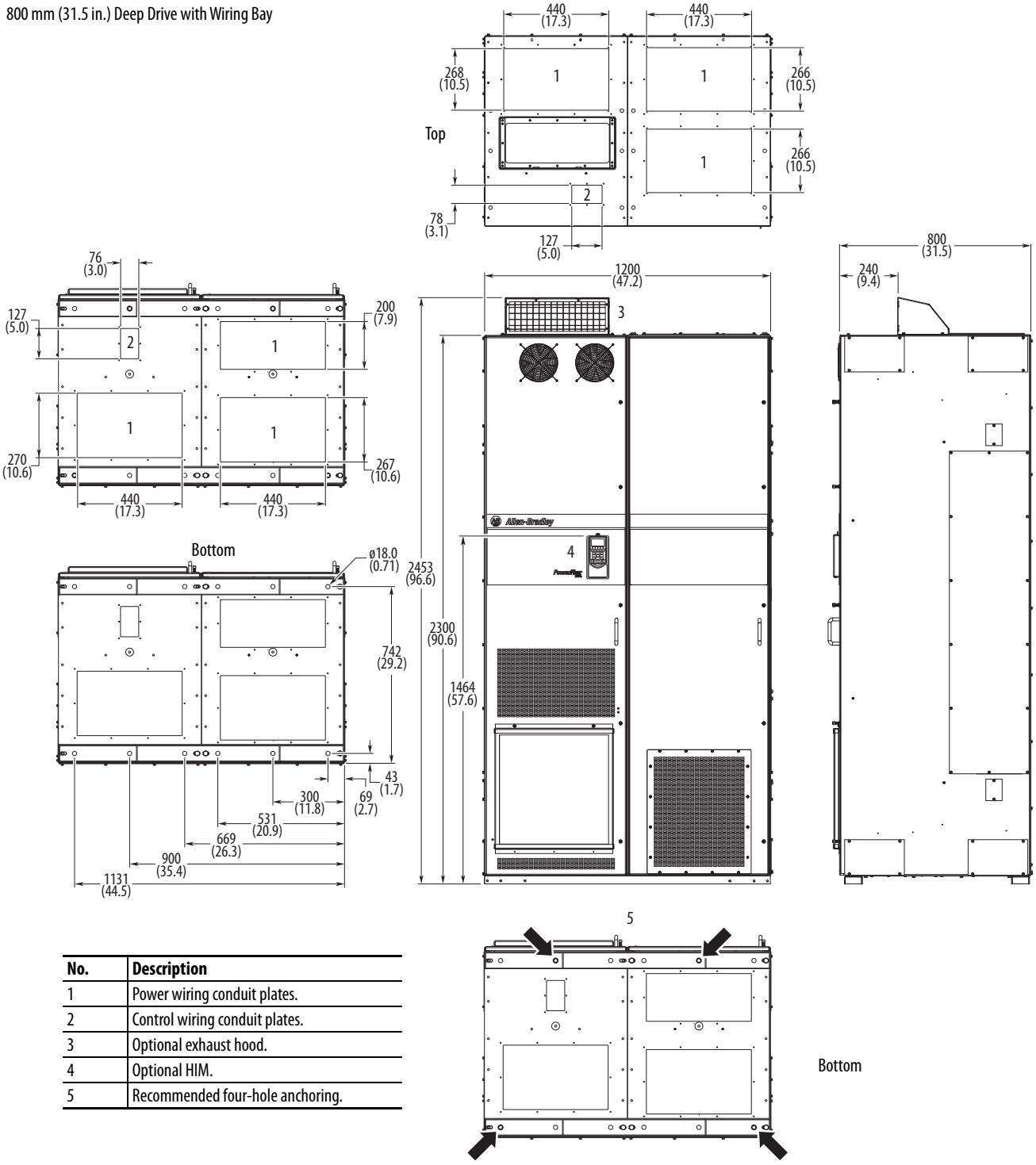

No.	Description
1	Power wiring conduit plates.
2	Control wiring conduit plates.
3	Optional exhaust hood.
4	Optional HIM.
5	Recommended four-hole anchoring.

M12 (1/2 in.) Property Class 8.8 anchor hardware is recommended to fasten the drive cabinet through its internal mounting angle to the foundation. Anchor bolts can be pre-located and embedded in the foundation before instillation.

Figure 59 - IP20, NEMA/UL Type 1, MCC Style Cabinet, Floor Mount Frame 8 (Enclosure Code L, P, W)

800 mm (31.5 in.) Deep Drive with Wiring Bay and Cabinet Options Bay

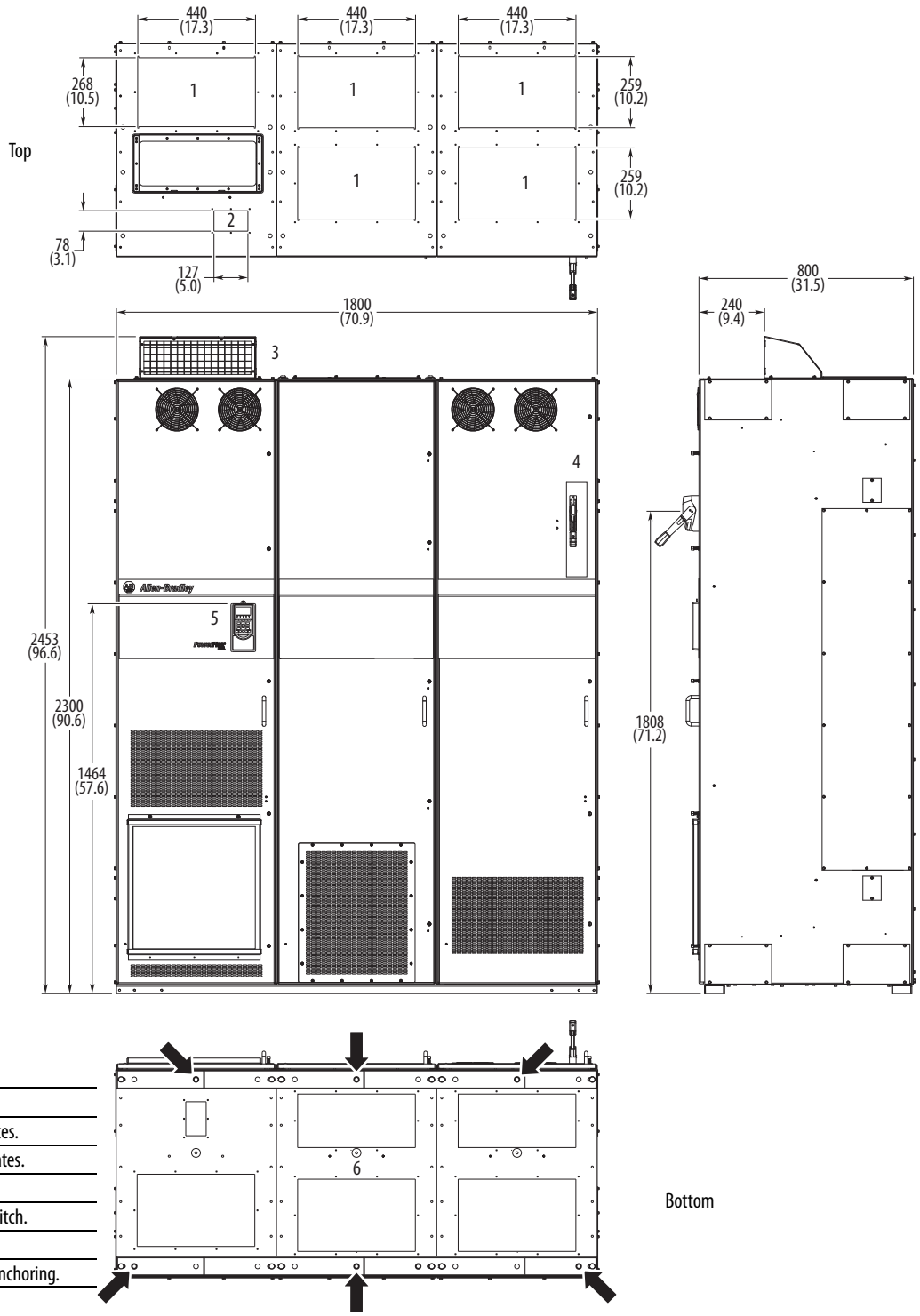

No.	Description
1	Power wiring conduit plates.
2	Control wiring conduit plates.
3	Optional exhaust hood.
4	Option bay disconnect switch.
5	Optional HIM.
6	Recommended six-hole anchoring.

M12 (1/2 in.) Property Class 8.8 anchor hardware is recommended to fasten the drive cabinet through its internal mounting angle to the foundation. Anchor bolts can be pre-located and embedded in the foundation before instillation.

Figure 60 - IP20, NEMA/UL Type 1, MCC Style Cabinet, Floor Mount Frame 8 Bottom Access (Enclosure Code L, P, W)

800 mm (31.5 in.) Deep Drive with Wiring Bay and Cabinet Options Bay

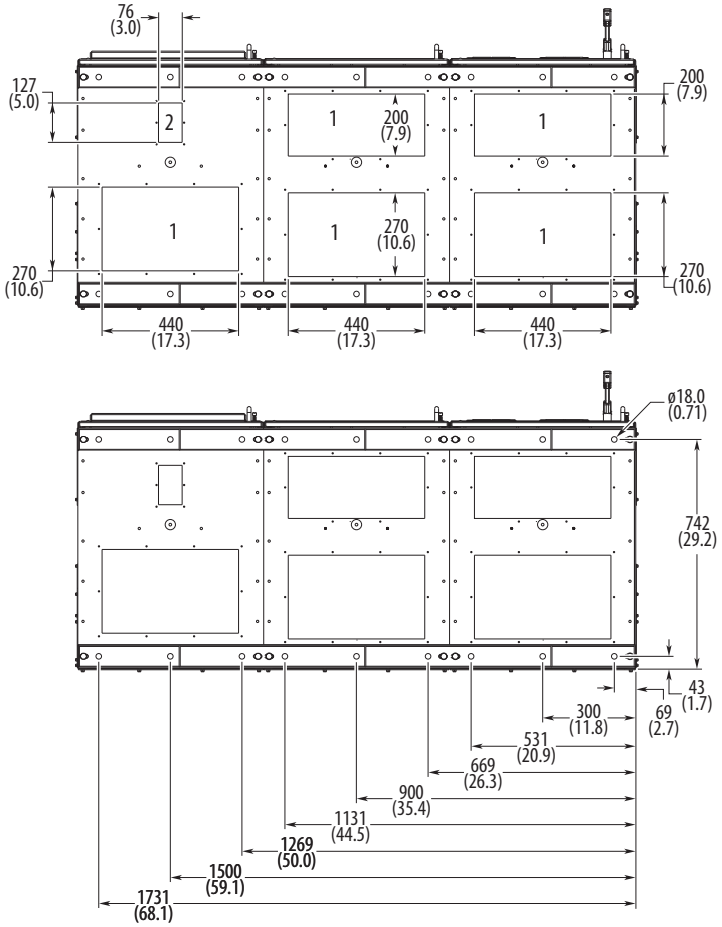

No.	Description
1	Power wiring conduit plates.
2	Control wiring conduit plates.

Figure 61 - IP54, NEMA 12, MCC Style Cabinet, Floor Mount Frame 8 (Enclosure Codes K and Y)
IP54, UL Type 12, MCC Style Cabinet, Floor Mount Frame 8 (Enclosure Code J)

800 mm (31.5 in.) Deep Drive with Cabinet Options Bay

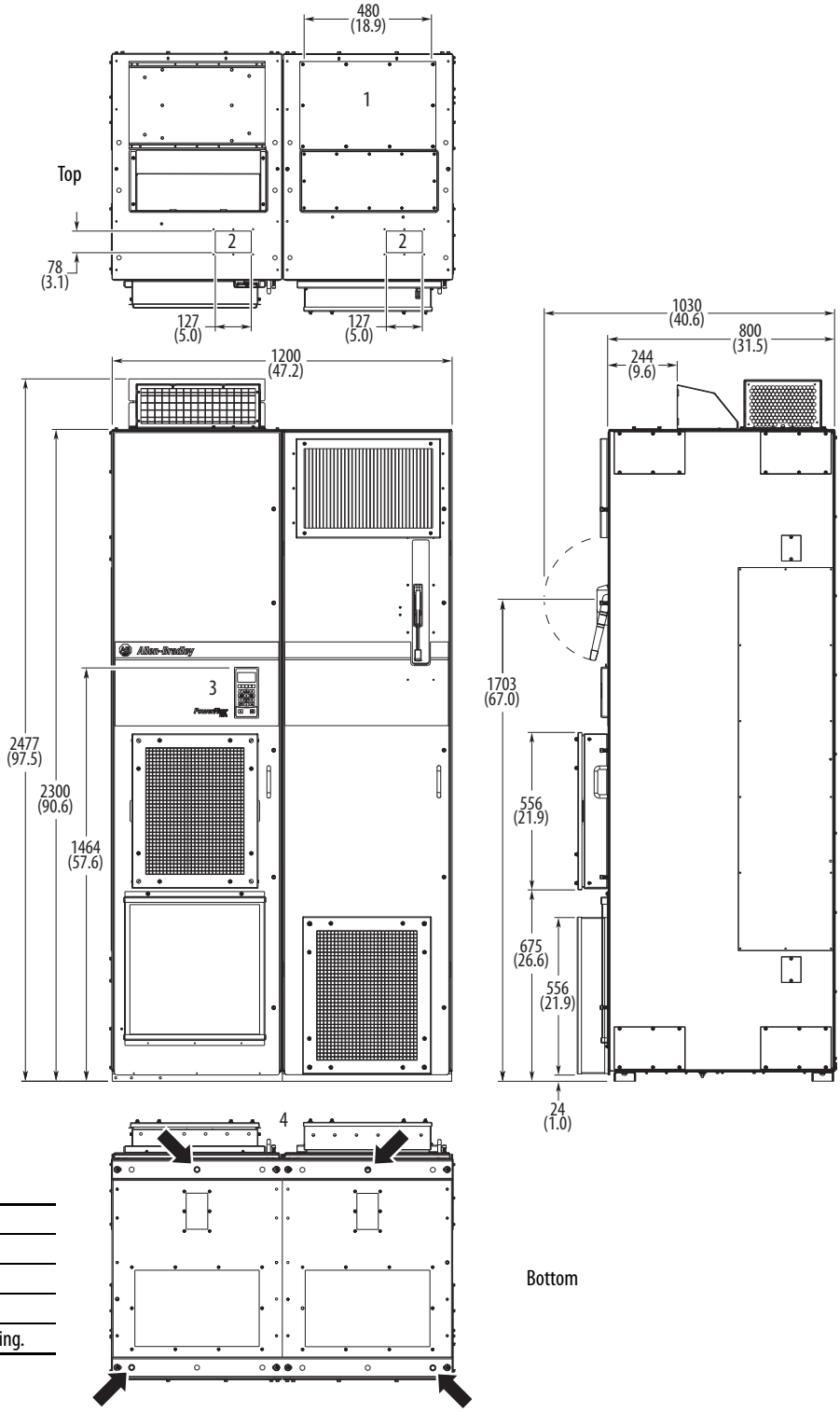

No.	Description
1	Power wiring conduit plates.
2	Control wiring conduit plates.
3	Optional HIM.
4	Recommended four-hole anchoring.

M12 (1/2 in.) Property Class 8.8 anchor hardware is recommended to fasten the drive cabinet through its internal mounting angle to the foundation. Anchor bolts can be pre-located and embedded in the foundation before instillation.

Figure 62 - IP54, NEMA 12, MCC Style Cabinet, Floor Mount Frame 8 Bottom Access (Enclosure Codes K and Y)
IP54, UL Type 12, MCC Style Cabinet, Floor Mount Frame 8 Bottom Access (Enclosure Code J)

800 mm (31.5 in.) Deep Drive with Cabinet Options Bay

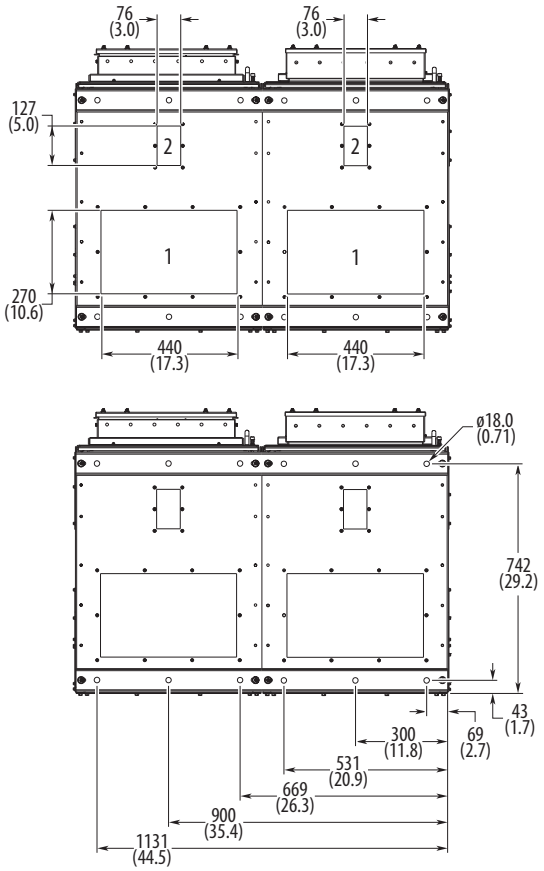

No.	Description
1	Power wiring conduit plates.
2	Control wiring conduit plates.

Figure 63 - IP54, NEMA 12, MCC Style Cabinet, Floor Mount Frame 8 (Enclosure Codes K and Y) IP54, UL Type 12, MCC Style Cabinet, Floor Mount Frame 8 (Enclosure Code J) with P14

800 mm (31.5 in.) Deep Drive with Wiring Bay

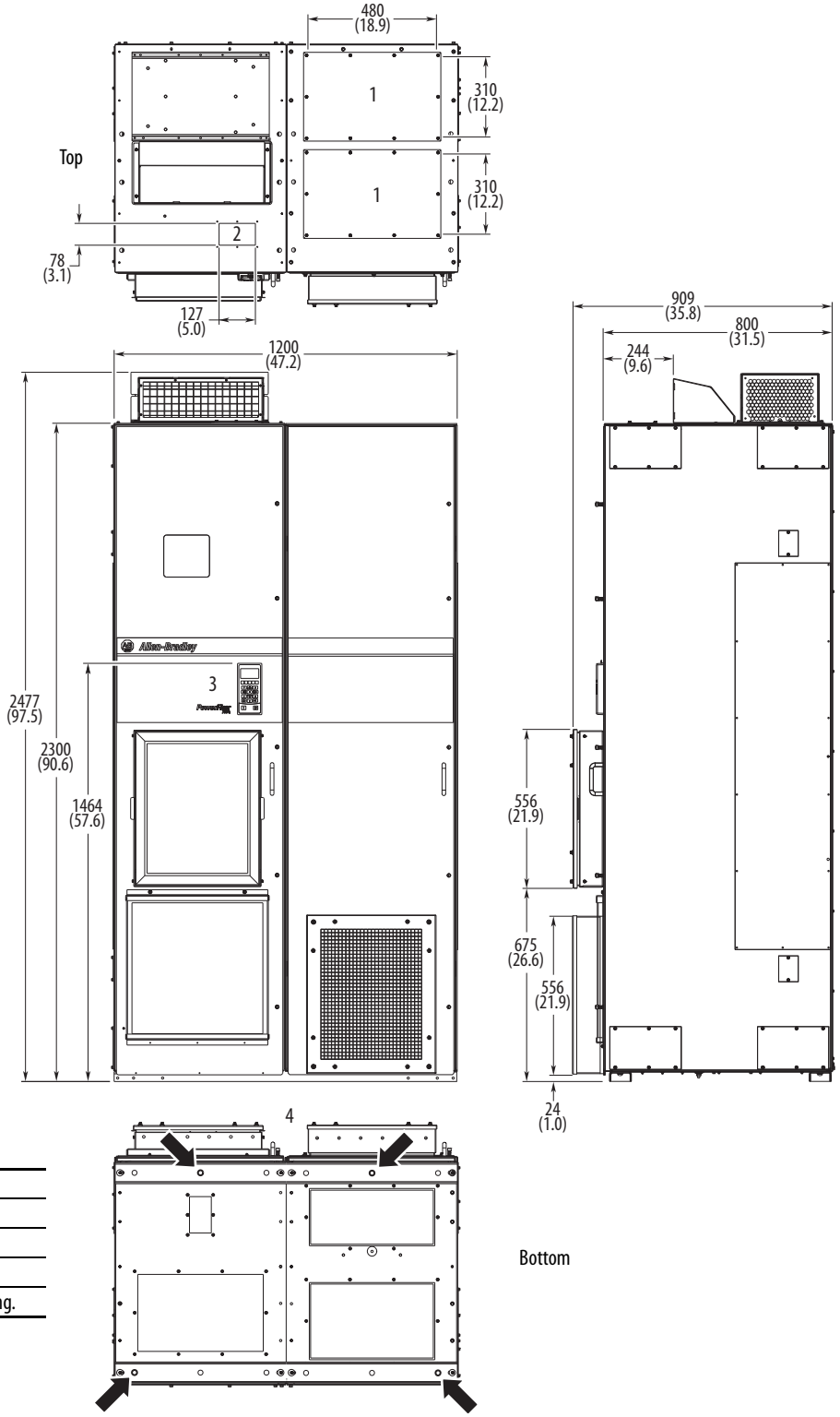

No.	Description
1	Power wiring conduit plates.
2	Control wiring conduit plates.
3	Optional HIM.
4	Recommended four-hole anchoring.

M12 (1/2 in.) Property Class 8.8 anchor hardware is recommended to fasten the drive cabinet through its internal mounting angle to the foundation. Anchor bolts can be pre-located and embedded in the foundation before instillation.

Figure 64 - IP54, NEMA 12, MCC Style Cabinet, Floor Mount Frame 8 Bottom Access (Enclosure Codes K and Y)
IP54, UL Type 12, MCC Style Cabinet, Floor Mount Frame 8 Bottom Access (Enclosure Code J) with P14

800 mm (31.5 in.) Deep Drive with Wiring Bay

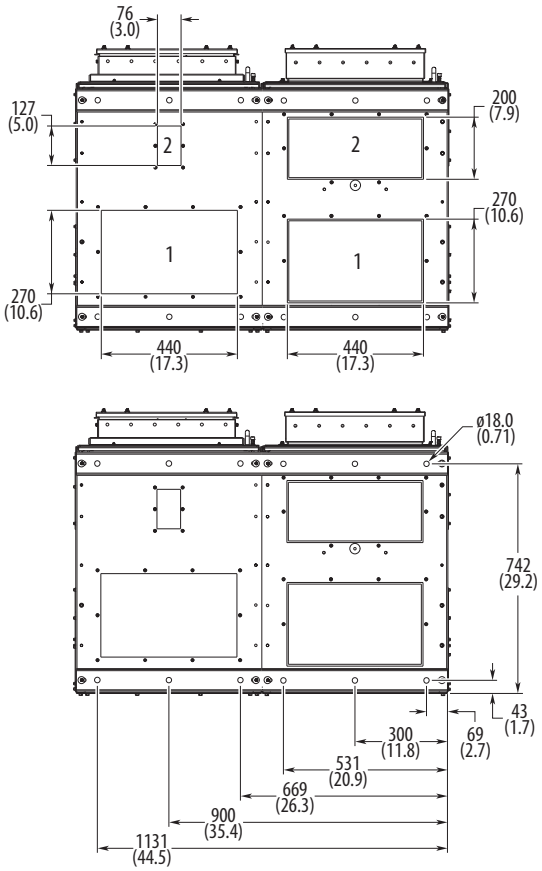

No.	Description
1	Power wiring conduit plates.
2	Control wiring conduit plates.

Figure 65 - IP54, NEMA 12, MCC Style Cabinet, Floor Mount Frame 8 (Enclosure Codes K and Y)
IP54, UL Type 12, MCC Style Cabinet, Floor Mount Frame 8 (Enclosure Code J)

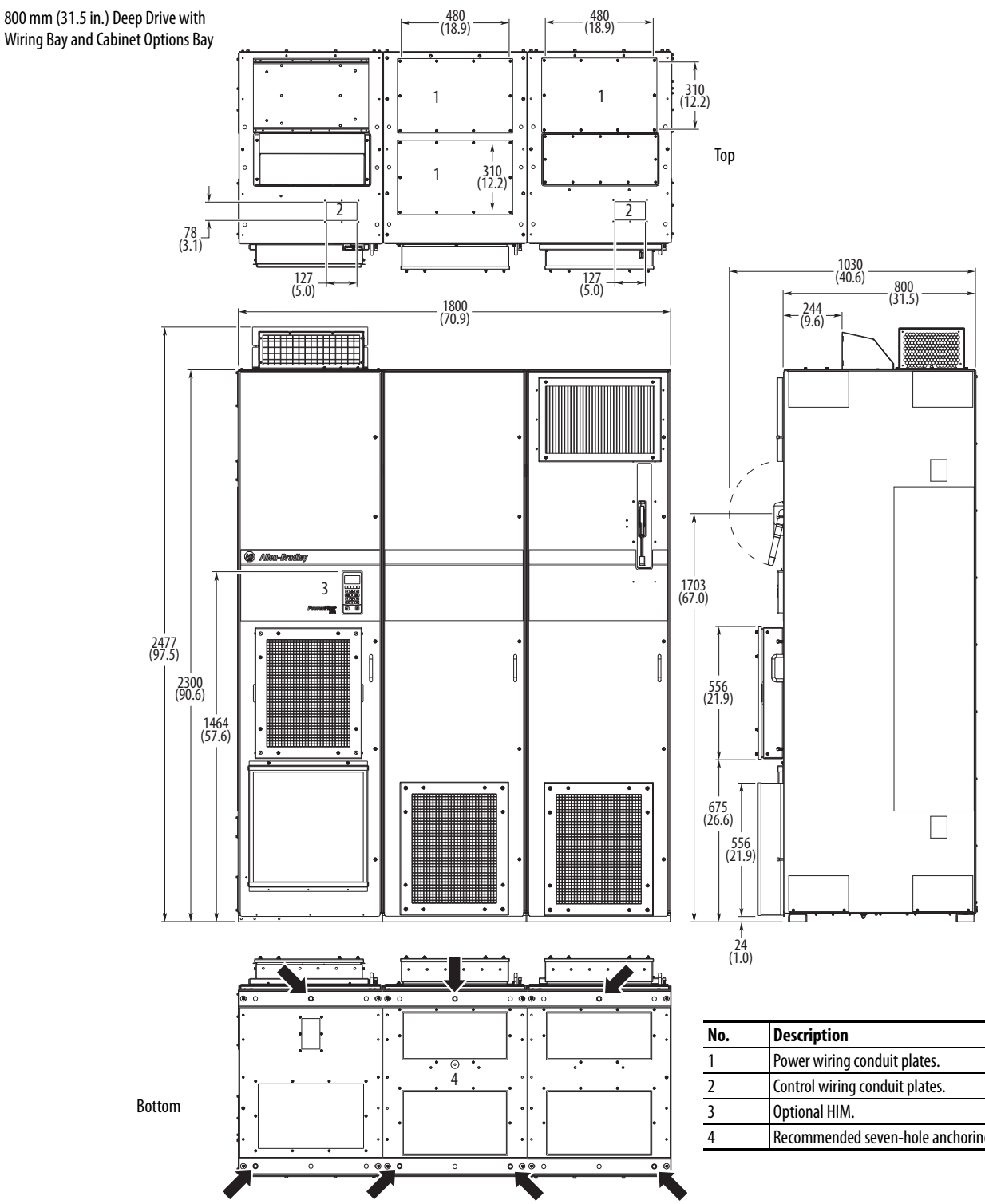

No.	Description
1	Power wiring conduit plates.
2	Control wiring conduit plates.
3	Optional HIM.
4	Recommended seven-hole anchoring.

M12 (1/2 in.) Property Class 8.8 anchor hardware is recommended to fasten the drive cabinet through its internal mounting angle to the foundation. Anchor bolts can be pre-located and embedded in the foundation before instillation.

Figure 66 - IP54, NEMA 12, MCC Style Cabinet, Floor Mount Frame 8 Bottom Access (Enclosure Codes K and Y)
IP54, UL Type 12, MCC Style Cabinet, Floor Mount Frame 8 Bottom Access (Enclosure Code J)

800 mm (31.5 in.) Deep Drive with Wiring Bay and Cabinet Options Bay

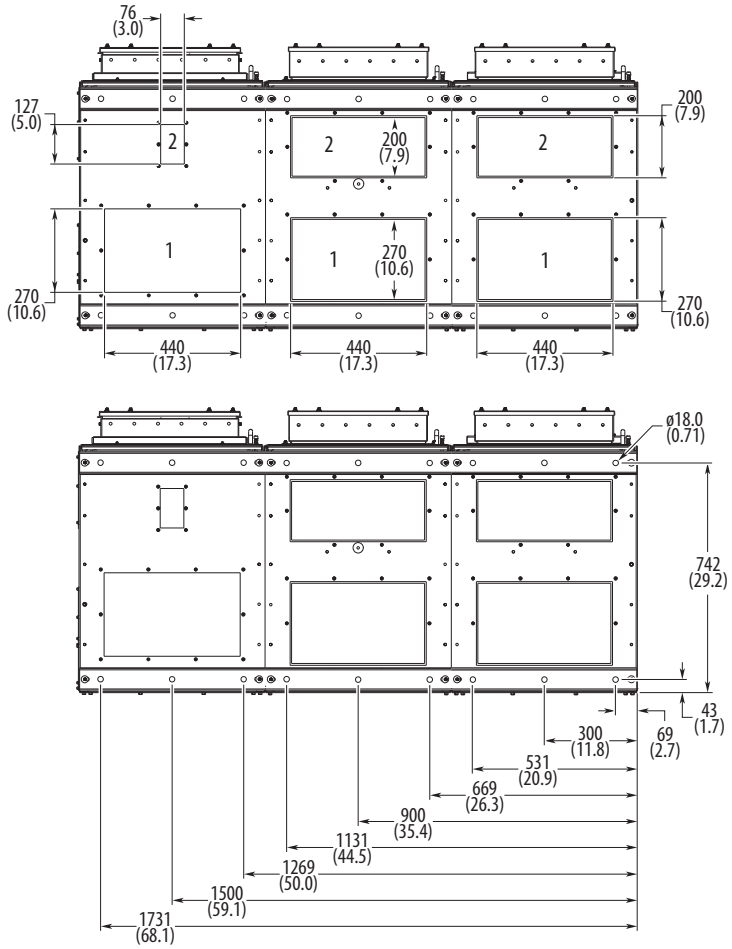

No.	Description
1	Power wiring conduit plates.
2	Control wiring conduit plates.

Figure 67 - IP20, NEMA/UL Type 1, MCC Style Cabinet, Floor Mount Frame 9 (Enclosure Code B with P14)

600 mm (23.6 in.) Deep Drive with Cabinet Options Bay

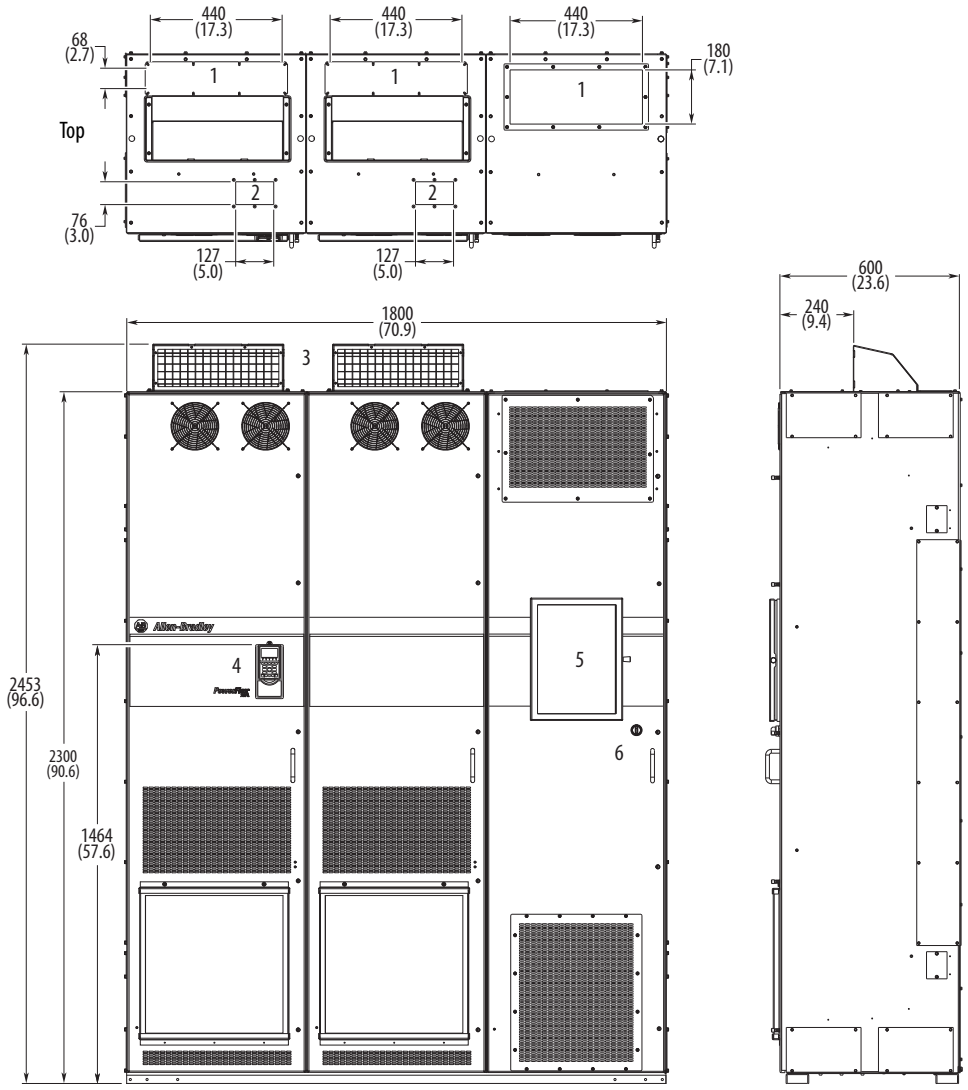

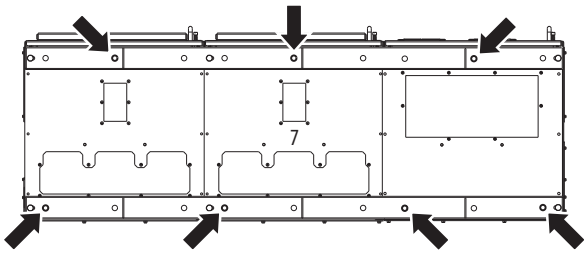

Bottom

No.	Description
1	Power wiring conduit plates.
2	Control wiring conduit plates.
3	Optional exhaust hood.
4	Optional HIM.
5	Option bay disconnect switch access door.
6	Interlock override switch. For instructions and precautions see the Hardware Service Manual, 750-TG001.
7	Recommended seven-hole anchoring.

M12 (1/2 in.) Property Class 8.8 anchor hardware is recommended to fasten the drive cabinet through its internal mounting angle to the foundation. Anchor bolts can be pre-located and embedded in the foundation before instillation.

600 mm (23.6 in.) Deep Drive with Cabinet Options Bay

Figure 68 - IP20, NEMA/UL Type 1, MCC Style Cabinet, Floor Mount Frame 9 Bottom Access (Enclosure Code B with P14)

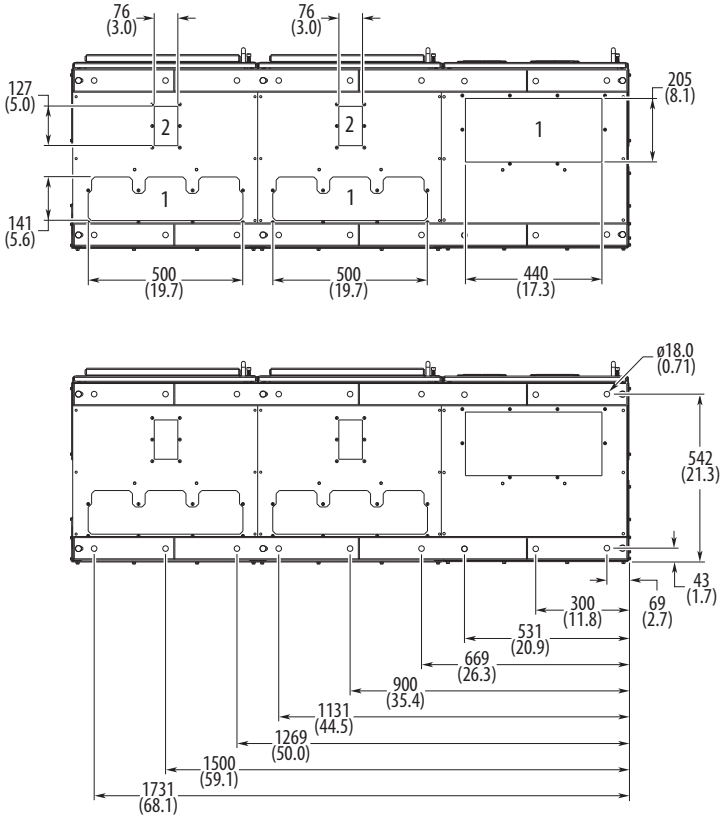

No.	Description
1	Power wiring conduit plates.
2	Control wiring conduit plates.

Figure 69 - IP20, NEMA/UL Type 1, MCC Style Cabinet, Floor Mount Frame 9 (Enclosure Code B with P14)

600 mm (23.6 in.) Deep Drive with Wiring Bay

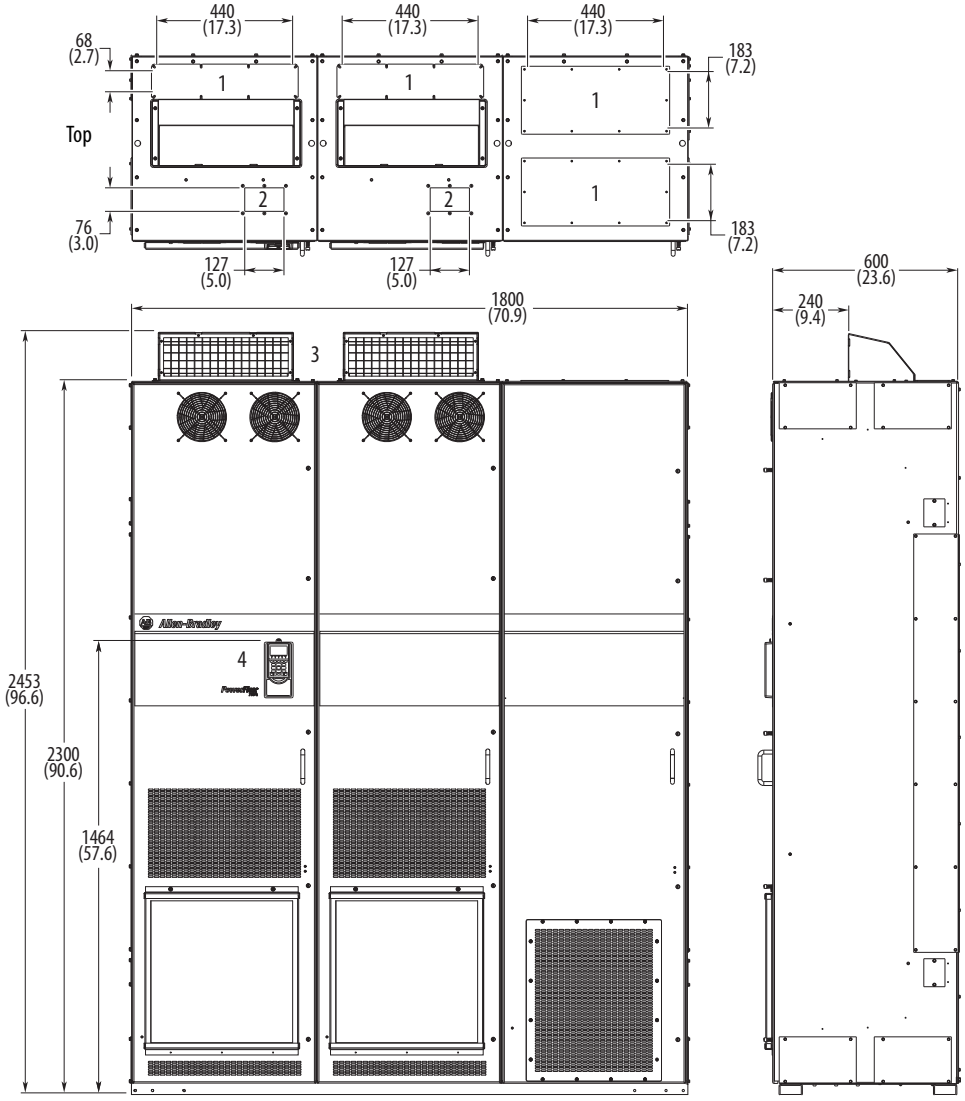

No.	Description
1	Power wiring conduit plates.
2	Control wiring conduit plates.
3	Optional exhaust hood.
4	Optional HIM.
5	Recommended seven-hole anchoring.

M12 (1/2 in.) Property Class 8.8 anchor hardware is recommended to fasten the drive cabinet through its internal mounting angle to the foundation. Anchor bolts can be pre-located and embedded in the foundation before instillation.

600 mm (23.6 in.) Deep Drive with Wiring Bay

Figure 70 - IP20, NEMA/UL Type 1, MCC Style Cabinet, Floor Mount Frame 9 Bottom Access (Enclosure Code B with P14)

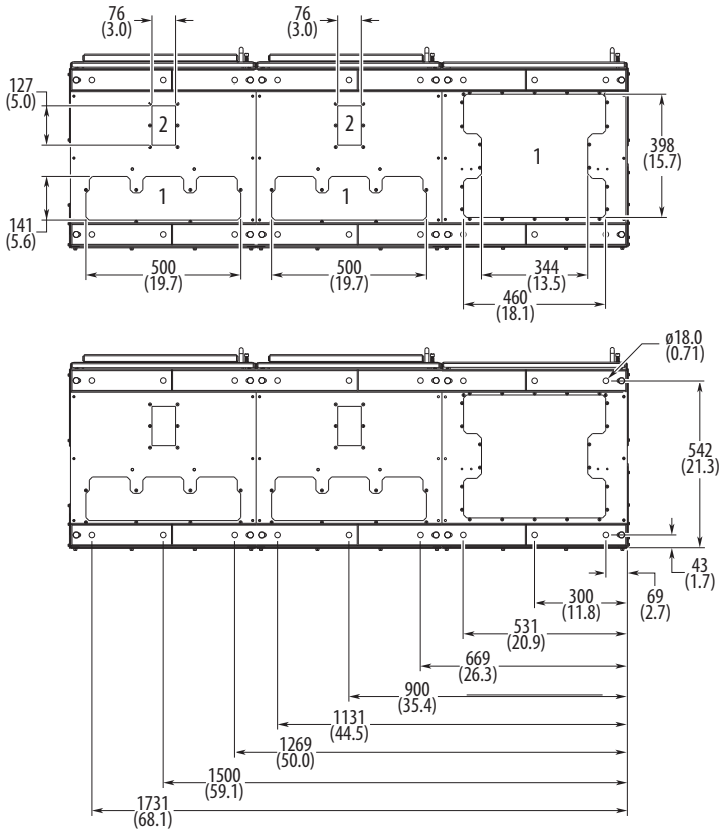

No.	Description
1	Power wiring conduit plates.
2	Control wiring conduit plates.

Figure 71 - IP20, NEMA/UL Type 1, MCC Style Cabinet, Floor Mount Frame 9 (Enclosure Code B)

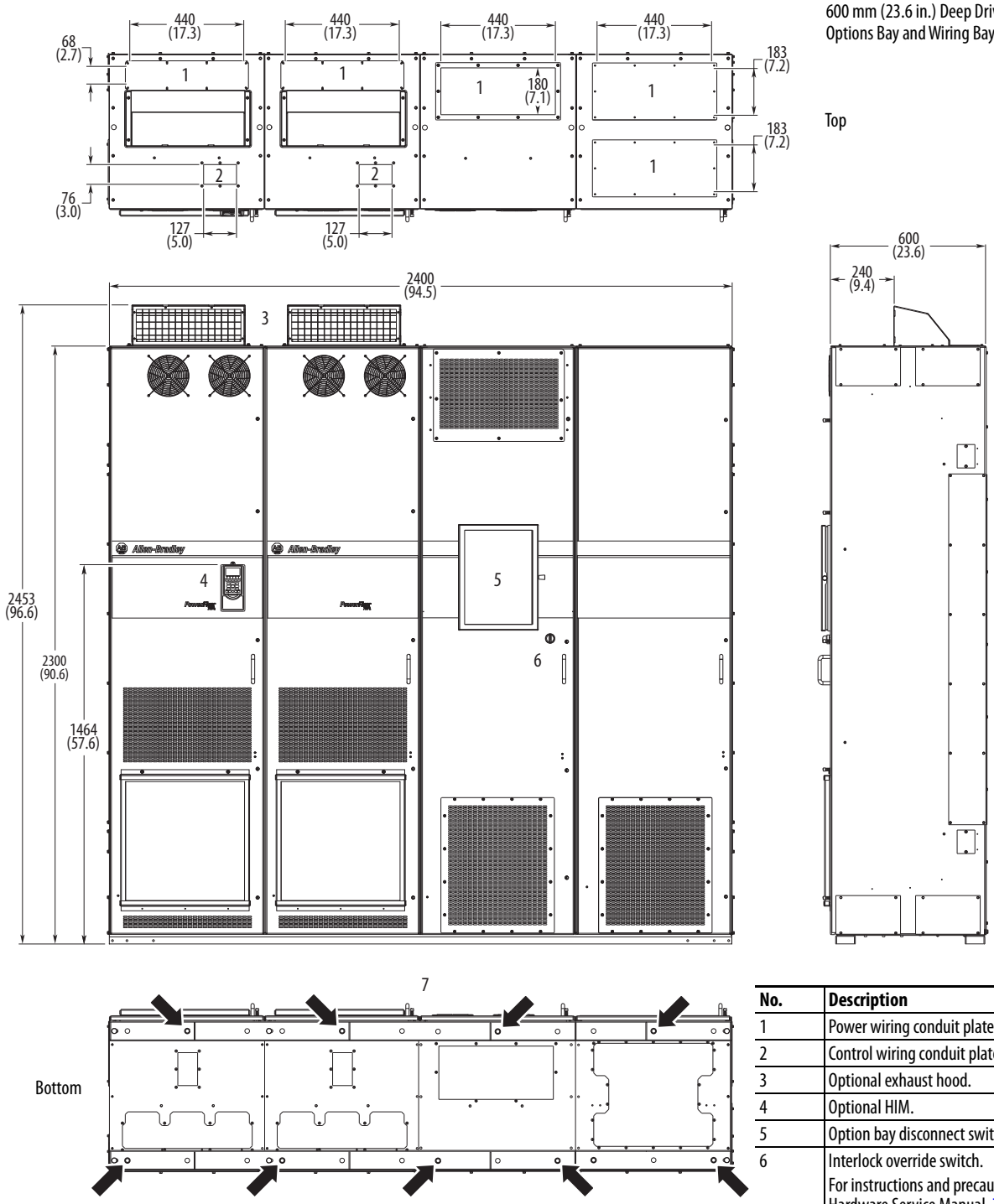

No.	Description
1	Power wiring conduit plates.
2	Control wiring conduit plates.
3	Optional exhaust hood.
4	Optional HIM.
5	Option bay disconnect switch access door.
6	Interlock override switch. For instructions and precautions see the Hardware Service Manual, 750-TG001.
7	Recommended nine-hole anchoring.

M12 (1/2 in.) Property Class 8.8 anchor hardware is recommended to fasten the drive cabinet through its internal mounting angle to the foundation. Anchor bolts can be pre-located and embedded in the foundation before instillation.

Figure 72 - IP20, NEMA/UL Type 1, MCC Style Cabinet, Floor Mount Frame 9 Bottom Access (Enclosure Code B)

600 mm (23.6 in.) Deep Drive with Cabinet Options Bay and Wiring Bay

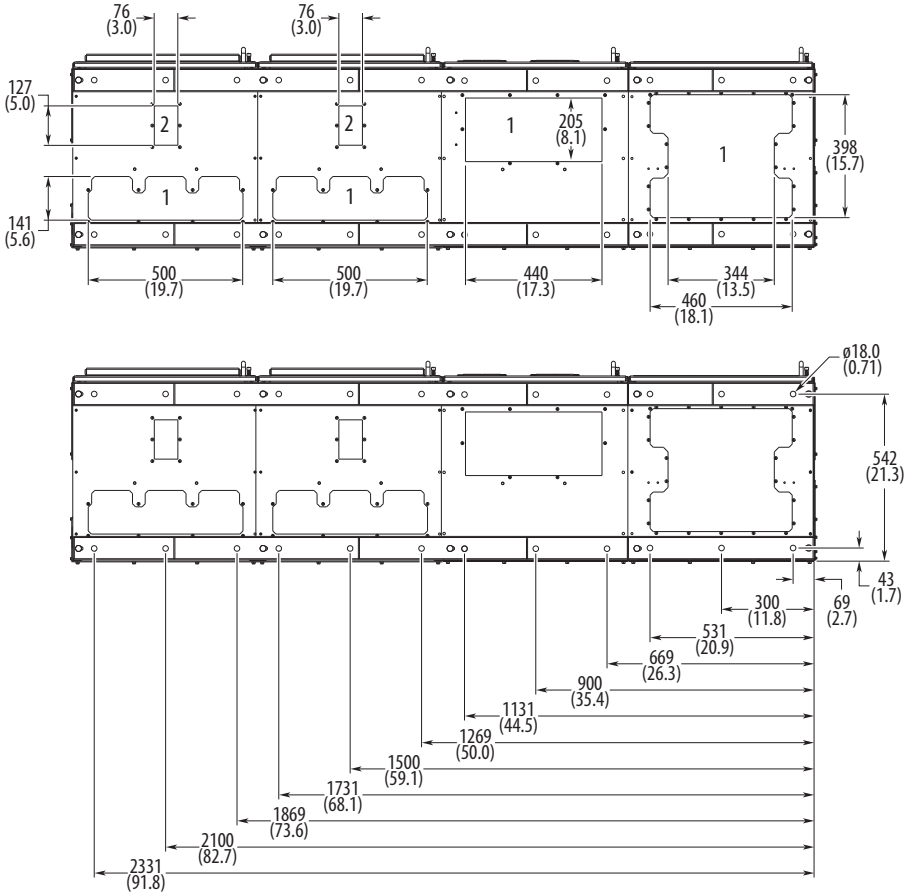

No.	Description
1	Power wiring conduit plates.
2	Control wiring conduit plates.

Figure 73 - IP20, NEMA/UL Type 1, MCC Style Cabinet, Floor Mount Frame 9 (Enclosure Code L, P, W)

800 mm (31.5 in.) Deep Drive with Cabinet Options Bay

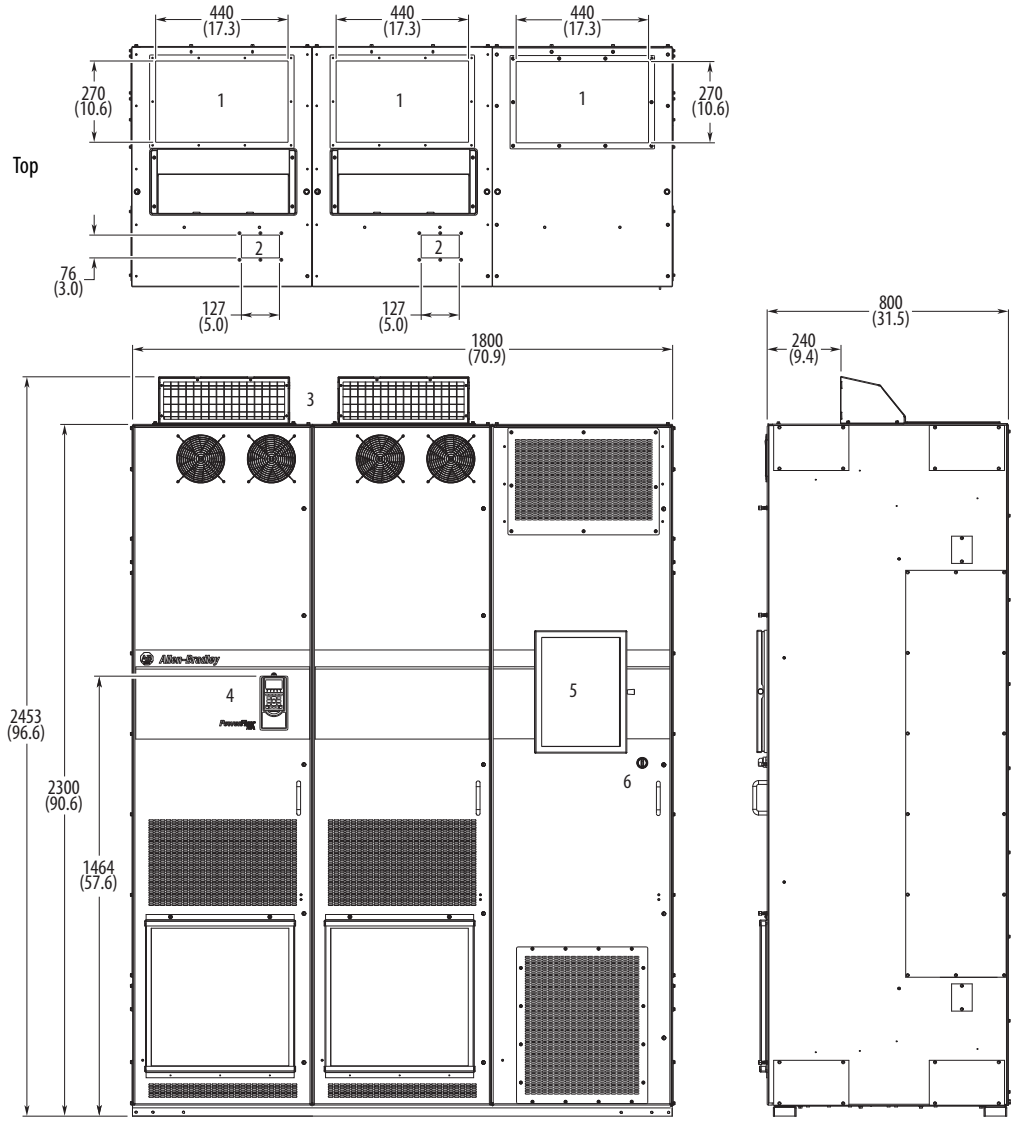

No.	Description
1	Power wiring conduit plates.
2	Control wiring conduit plates.
3	Optional exhaust hood.
4	Optional HIM.
5	Option bay disconnect switch access door.
6	Interlock override switch. For instructions and precautions see the Hardware Service Manual, 750-TG001.
7	Recommended seven-hole anchoring.

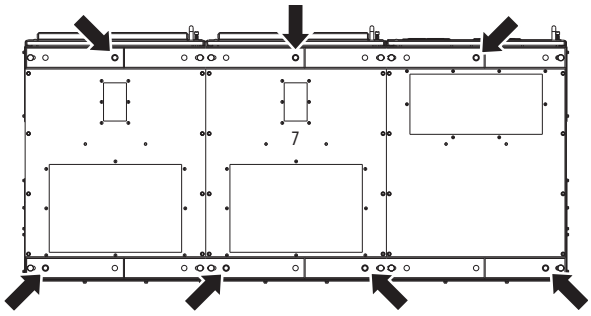

Bottom

M12 (1/2 in.) Property Class 8.8 anchor hardware is recommended to fasten the drive cabinet through its internal mounting angle to the foundation. Anchor bolts can be pre-located and embedded in the foundation before instillation.

Figure 74 - IP20, NEMA/UL Type 1, MCC Style Cabinet, Floor Mount Frame 9 Bottom Access (Enclosure Code L, P, W)

800 mm (31.5 in.) Deep Drive with Cabinet Options Bay

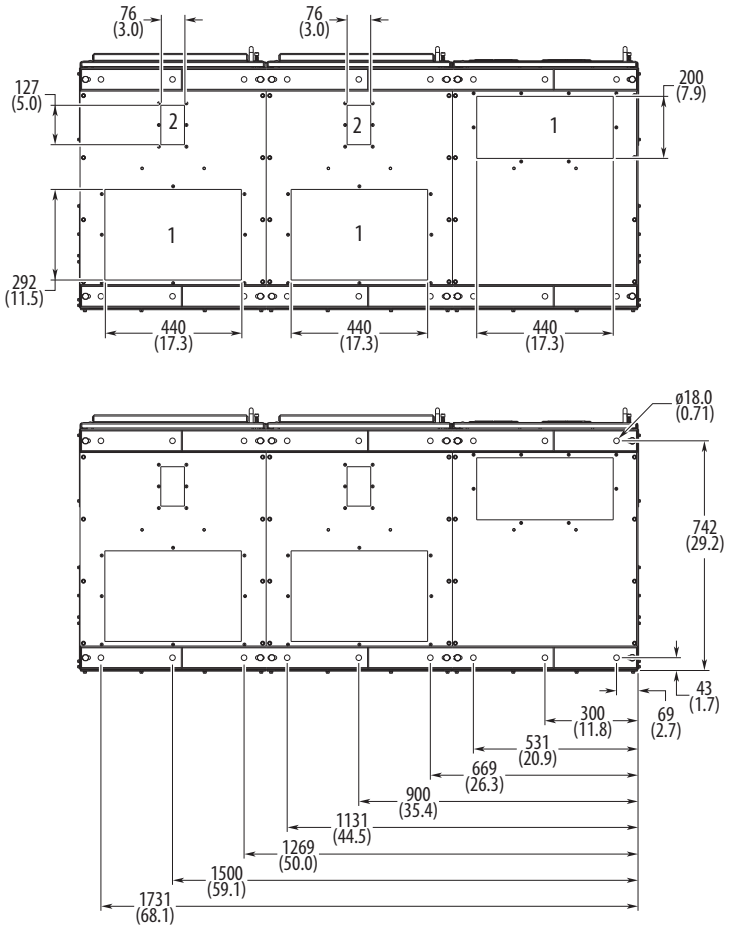

No.	Description
1	Power wiring conduit plates.
2	Control wiring conduit plates.

Figure 75 - NEMA/UL Type 1, MCC Style Cabinet, Floor Mount Frame 9 (Enclosure Code L, P, W)

800 mm (31.5 in.) Deep Drive with Wiring Bay

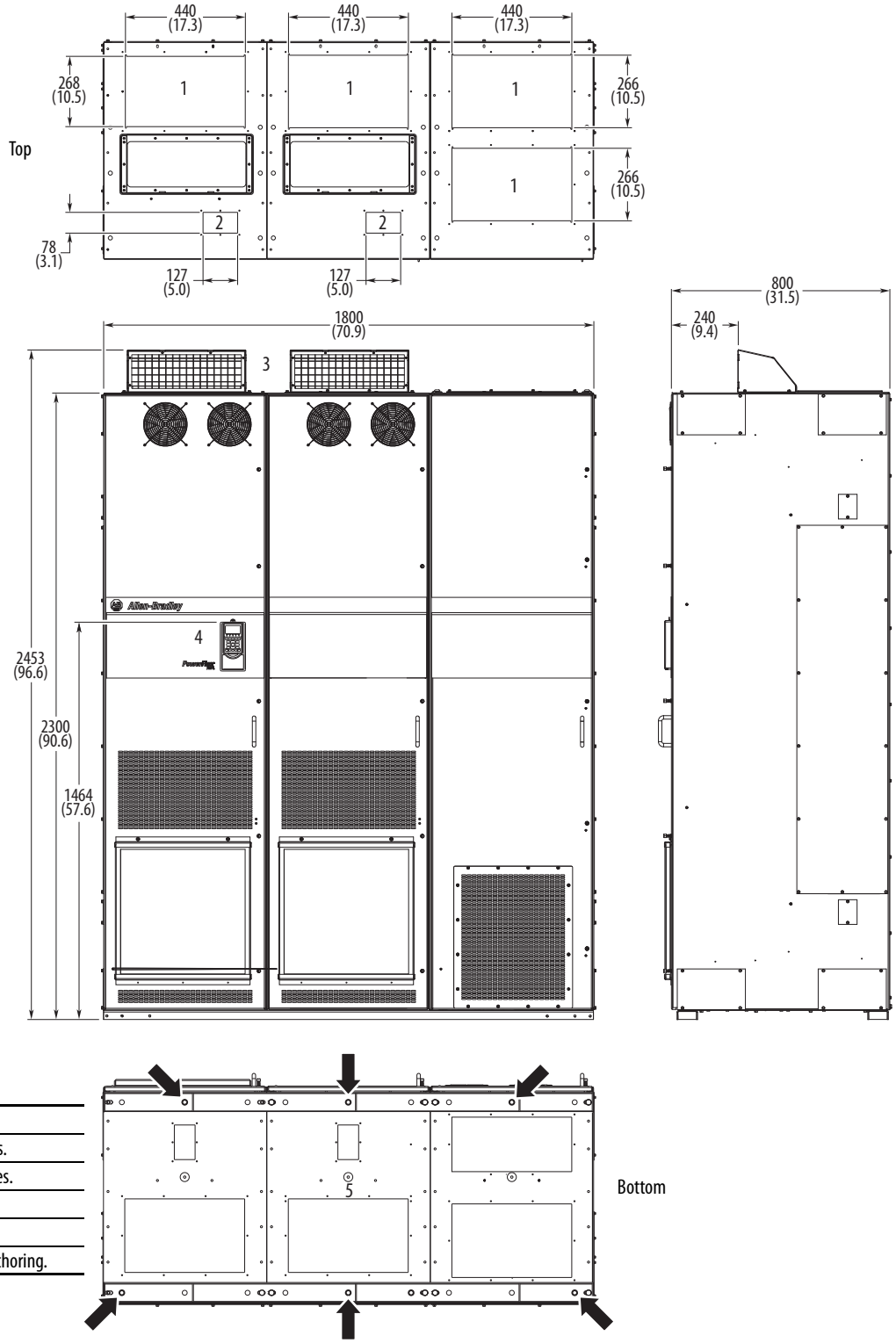

No.	Description
1	Power wiring conduit plates.
2	Control wiring conduit plates.
3	Optional exhaust hood.
4	Optional HIM.
5	Recommended six-hole anchoring.

M12 (1/2 in.) Property Class 8.8 anchor hardware is recommended to fasten the drive cabinet through its internal mounting angle to the foundation. Anchor bolts can be pre-located and embedded in the foundation before instillation.

Figure 76 - IP20, NEMA/UL Type 1, MCC Style Cabinet, Floor Mount Frame 9 Bottom Access (Enclosure Code L, P, W)

800 mm (31.5 in.) Deep Drive with Wiring Bay

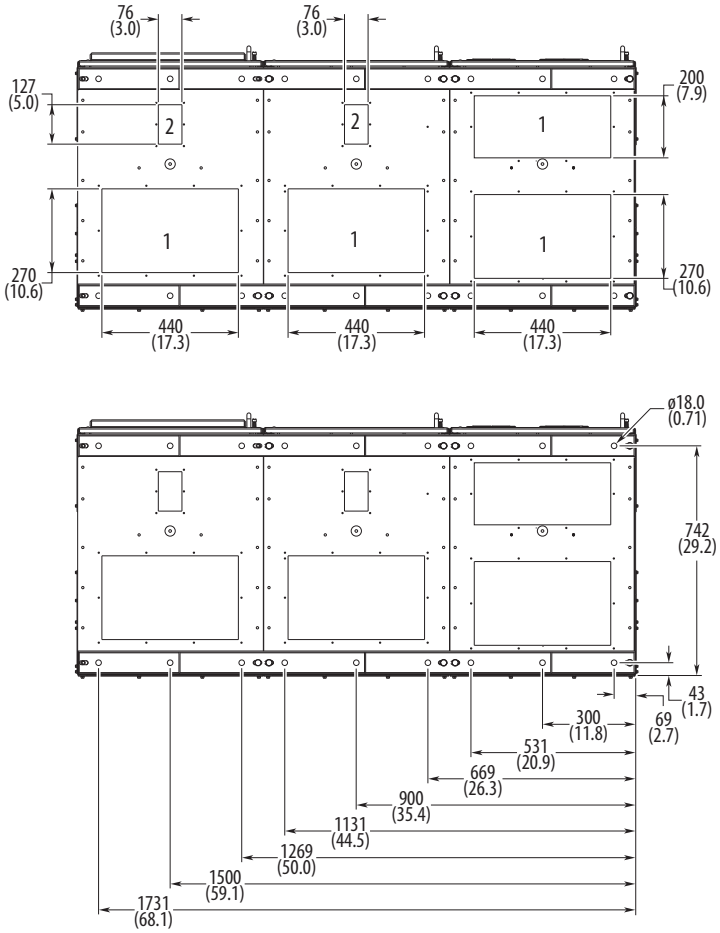

No.	Description
1	Power wiring conduit plates.
2	Control wiring conduit plates.

Figure 77 - IP20, NEMA/UL Type 1, MCC Style Cabinet, Floor Mount Frame 9 (Enclosure Code L, P, W)

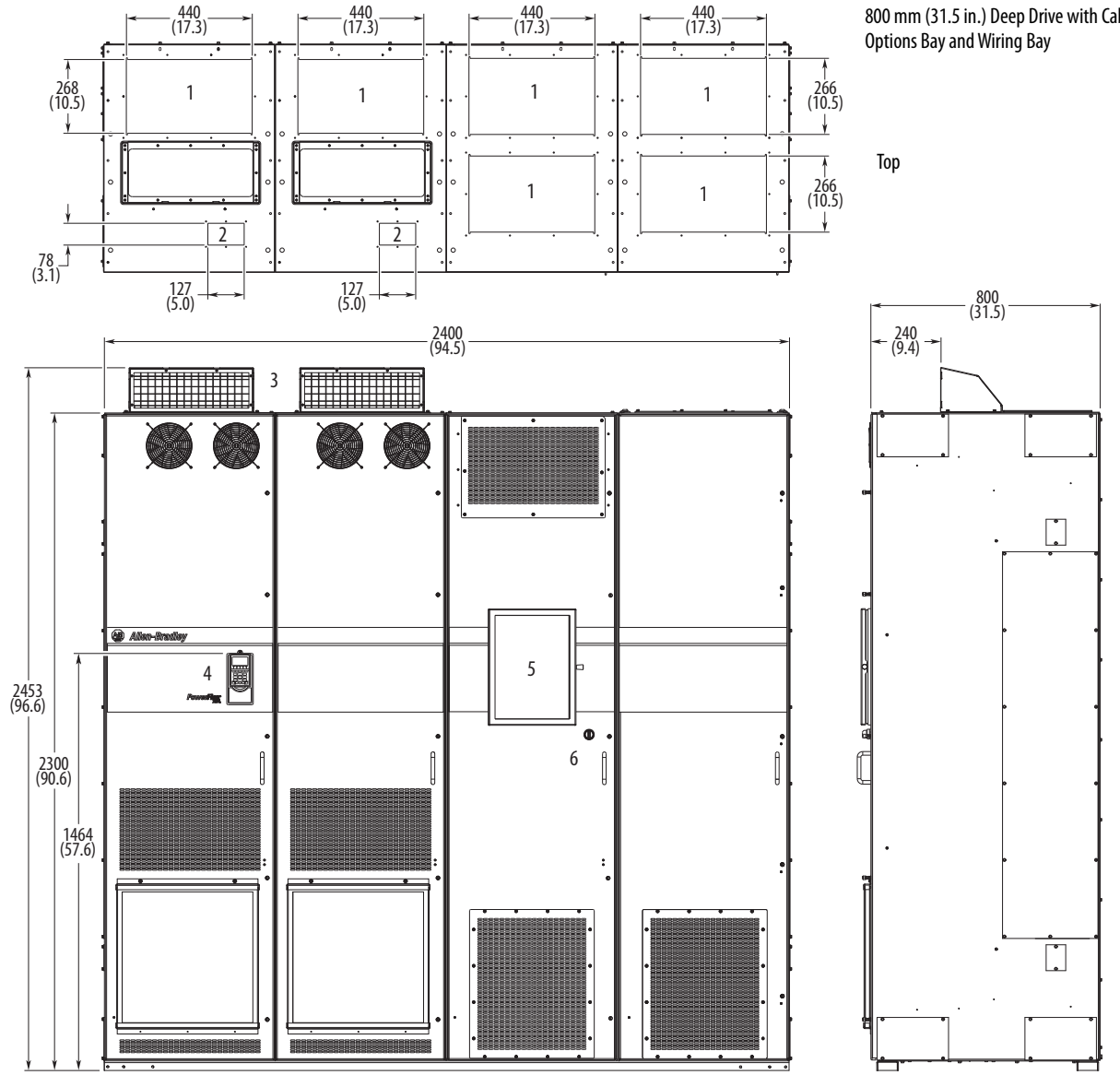

No.	Description
1	Power wiring conduit plates.
2	Control wiring conduit plates.
3	Optional exhaust hood.
4	Optional HIM.
5	Option bay disconnect switch access door.
6	Interlock override switch.
7	Recommended eight-hole anchoring.

M12 (1/2 in.) Property Class 8.8 anchor hardware is recommended to fasten the drive cabinet through its internal mounting angle to the foundation. Anchor bolts can be pre-located and embedded in the foundation before instillation.

Figure 78 - IP20, NEMA/UL Type 1, MCC Style Cabinet, Floor Mount Frame 9 Bottom Access (Enclosure Code L, P, W)

800 mm (31.5 in.) Deep Drive with Cabinet Options Bay and Wiring Bay

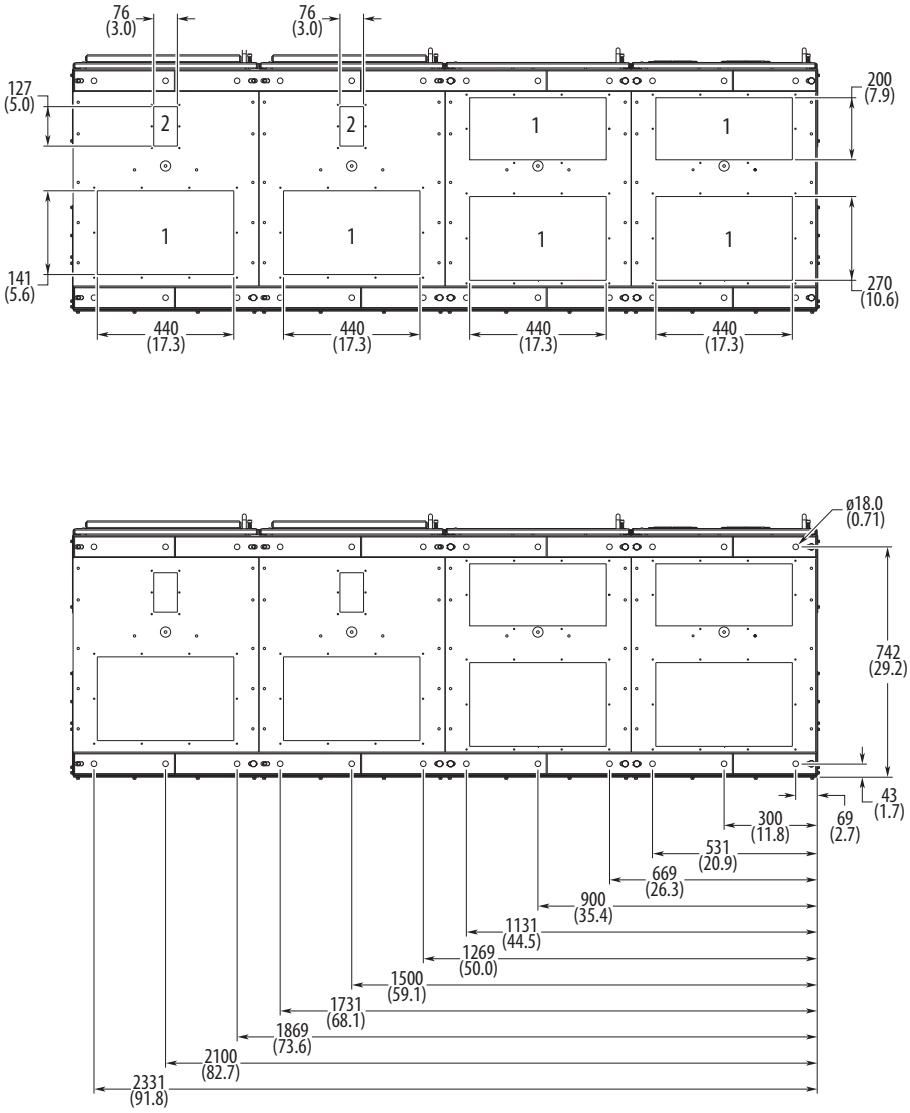

No.	Description
1	Power wiring conduit plates.
2	Control wiring conduit plates.

Figure 79 - IP54, NEMA 12, MCC Style Cabinet, Floor Mount Frame 9 (Enclosure Codes K and Y)
IP54, UL Type 12, MCC Style Cabinet, Floor Mount Frame 9 (Enclosure Code J)

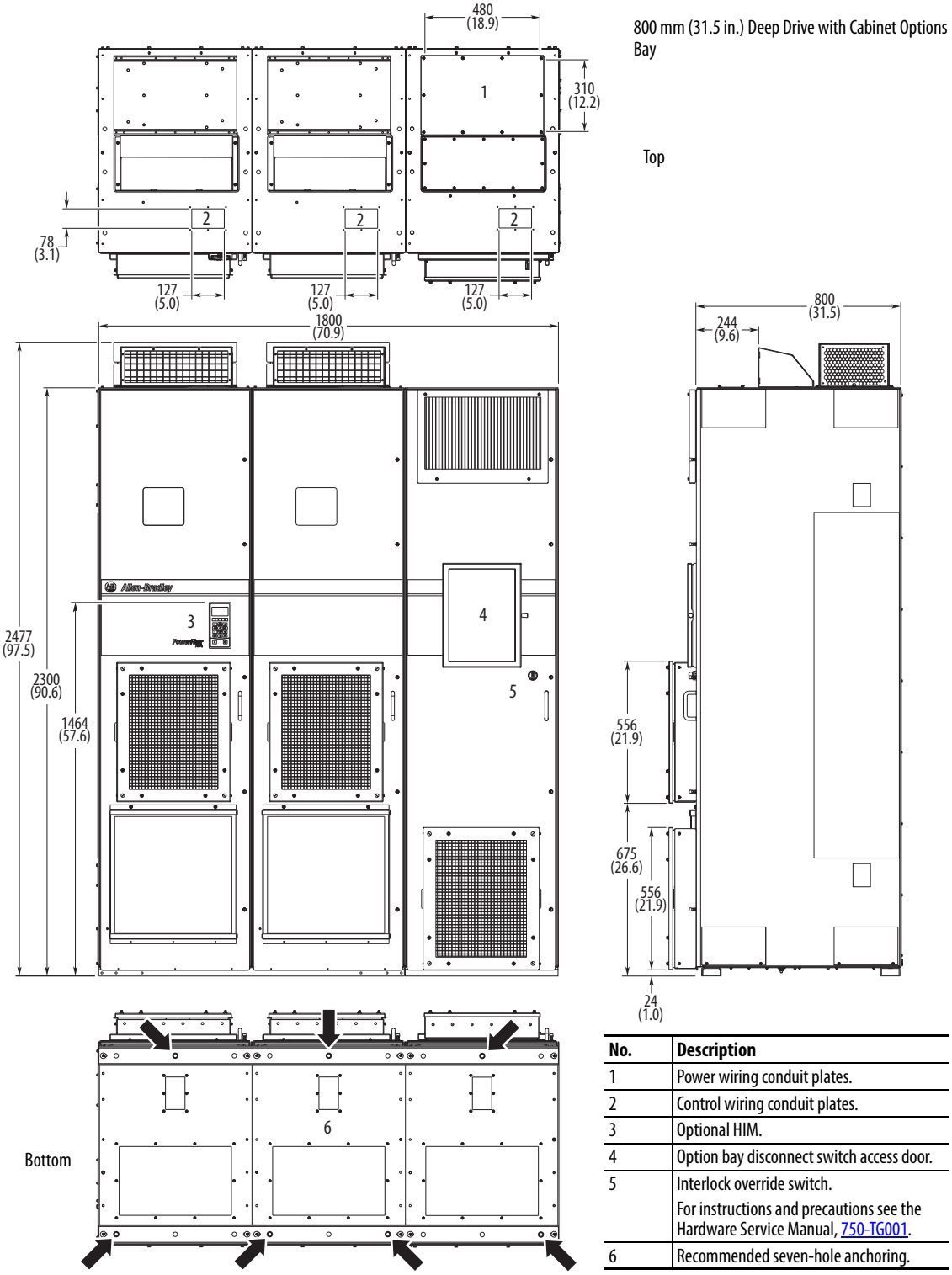

No.	Description
1	Power wiring conduit plates.
2	Control wiring conduit plates.
3	Optional HIM.
4	Option bay disconnect switch access door.
5	Interlock override switch. For instructions and precautions see the Hardware Service Manual, 750-TG001.
6	Recommended seven-hole anchoring.

M12 (1/2 in.) Property Class 8.8 anchor hardware is recommended to fasten the drive cabinet through its internal mounting angle to the foundation. Anchor bolts can be pre-located and embedded in the foundation before instillation.

Figure 80 - IP54, NEMA 12, MCC Style Cabinet, Floor Mount Frame 9 Bottom Access (Enclosure Codes K and Y)
IP54, UL Type 12, MCC Style Cabinet, Floor Mount Frame 9 Bottom Access (Enclosure Code J)

800 mm (31.5 in.) Deep Drive with Cabinet Options Bay

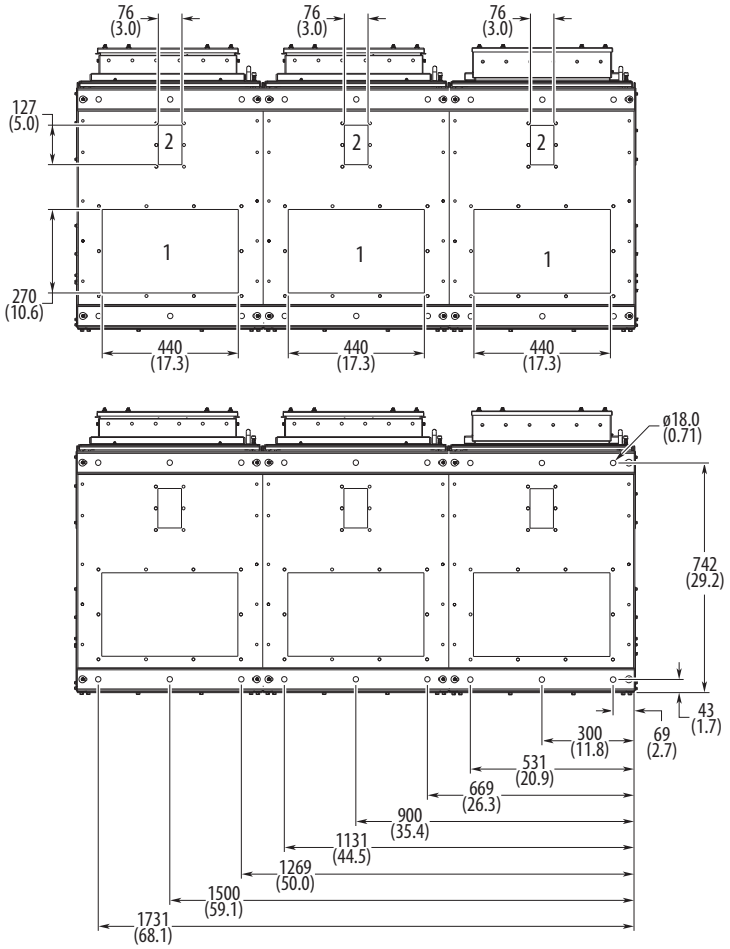

No.	Description
1	Power wiring conduit plates.
2	Control wiring conduit plates.

Figure 81 - IP54, NEMA 12, MCC Style Cabinet, Floor Mount Frame 9 (Enclosure Codes K and Y)
IP54, UL Type 12, MCC Style Cabinet, Floor Mount Frame 9 (Enclosure Code J)
With P14

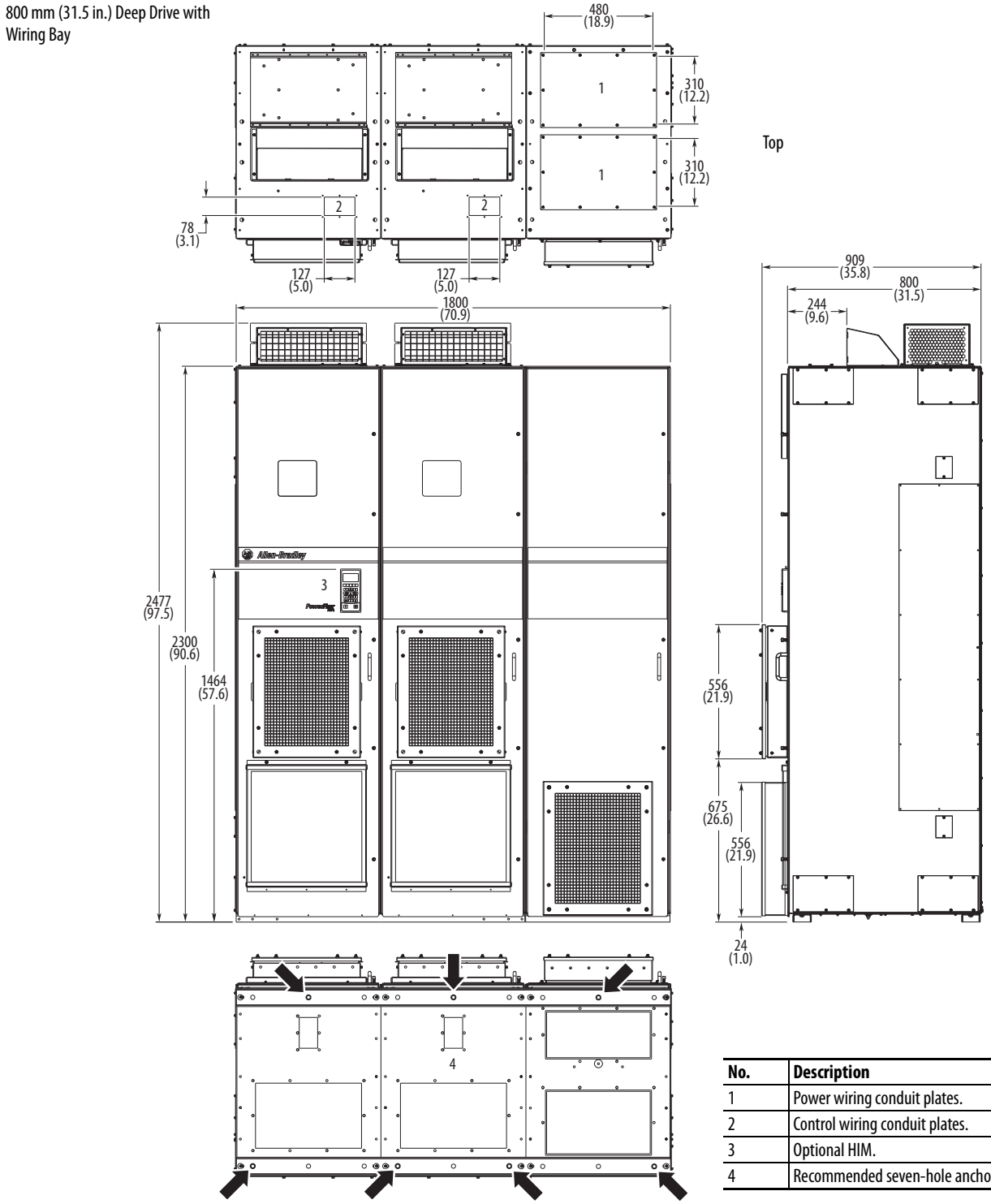

No.	Description
1	Power wiring conduit plates.
2	Control wiring conduit plates.
3	Optional HIM.
4	Recommended seven-hole anchoring.

M12 (1/2 in.) Property Class 8.8 anchor hardware is recommended to fasten the drive cabinet through its internal mounting angle to the foundation. Anchor bolts can be pre-located and embedded in the foundation before instillation.

Figure 82 - IP54, NEMA 12, MCC Style Cabinet, Floor Mount Frame 9 Bottom Access (Enclosure Codes K and Y)
IP54, UL Type 12, MCC Style Cabinet, Floor Mount Frame 9 Bottom Access (Enclosure Code J)

800 mm (31.5 in.) Deep Drive with Wiring Bay

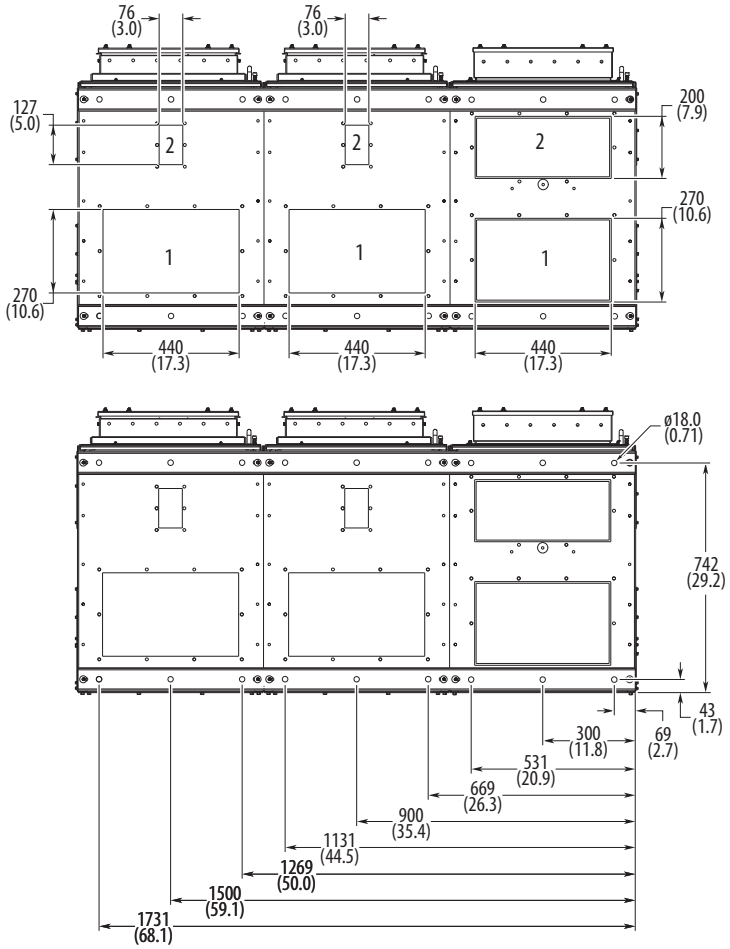

No.	Description
1	Power wiring conduit plates.
2	Control wiring conduit plates.

Figure 83 - IP54, NEMA 12, MCC Style Cabinet, Floor Mount Frame 9 (Enclosure Codes K and Y)
IP54, UL Type 12, MCC Style Cabinet, Floor Mount Frame 9 (Enclosure Code J)

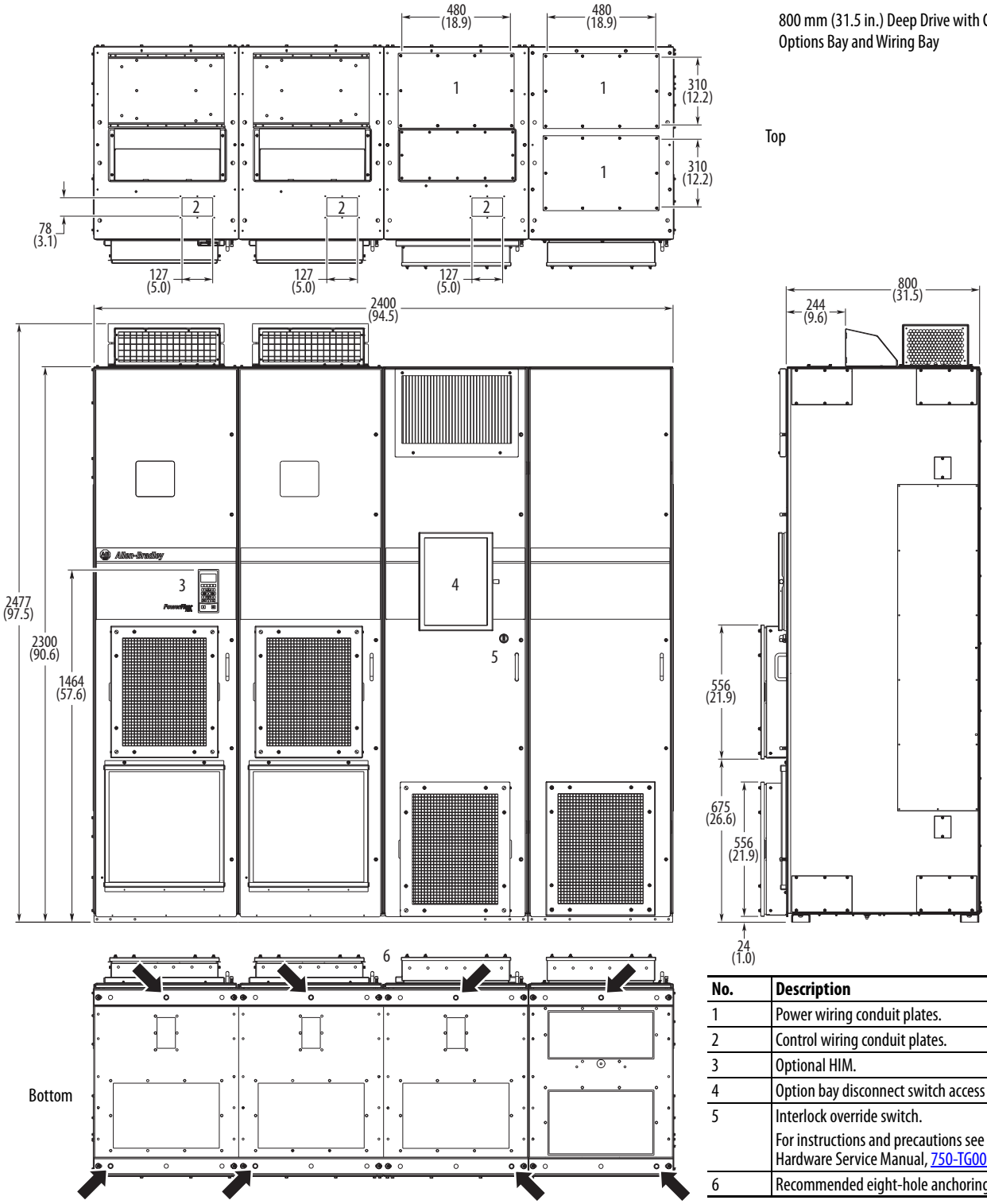

No.	Description
1	Power wiring conduit plates.
2	Control wiring conduit plates.
3	Optional HIM.
4	Option bay disconnect switch access door.
5	Interlock override switch. For instructions and precautions see the Hardware Service Manual, 750-TG001.
6	Recommended eight-hole anchoring.

M12 (1/2 in.) Property Class 8.8 anchor hardware is recommended to fasten the drive cabinet through its internal mounting angle to the foundation. Anchor bolts can be pre-located and embedded in the foundation before instillation.

Figure 84 - IP54, NEMA 12, MCC Style Cabinet, Floor Mount Frame 9 Bottom Access (Enclosure Codes K and Y)
IP54, UL Type 12, MCC Style Cabinet, Floor Mount Frame 9 Bottom Access (Enclosure Code J)

800 mm (31.5 in.) Deep Drive with Cabinet Options Bay and Wiring Bay

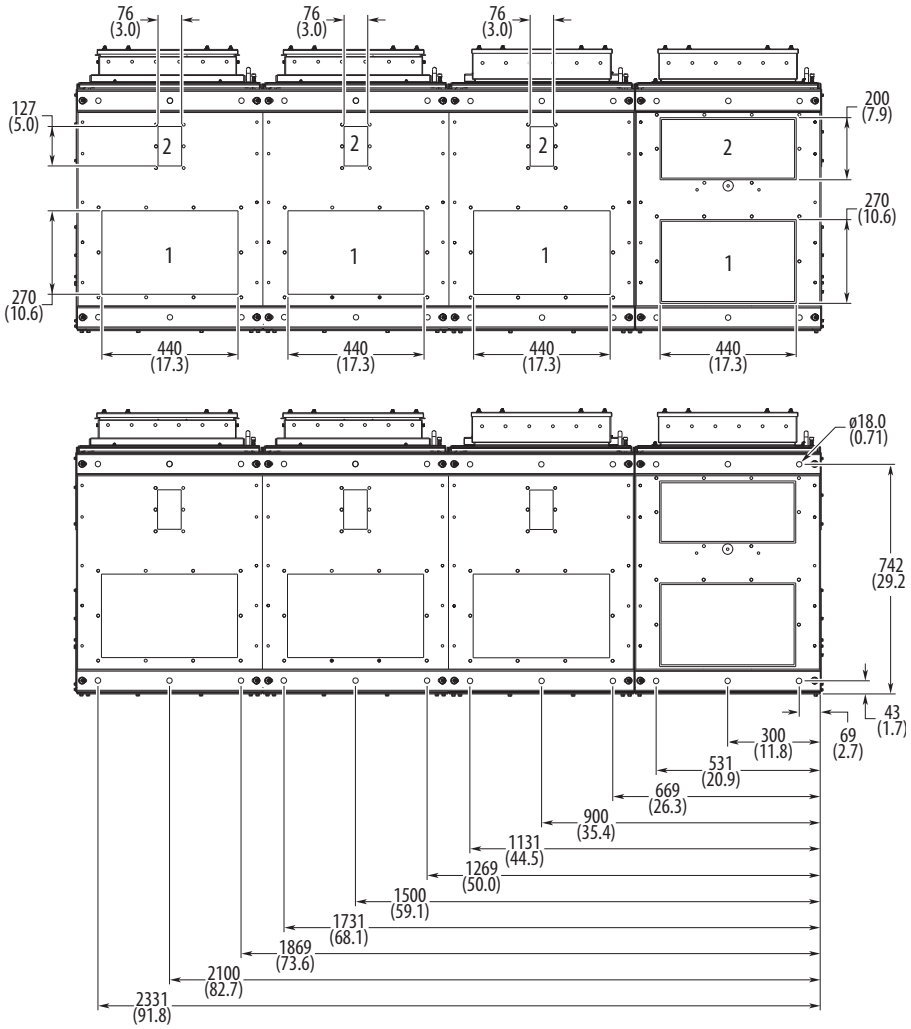

No.	Description
1	Power wiring conduit plates.
2	Control wiring conduit plates.

Figure 85 - Bus Bar Dimensions (AC Input)

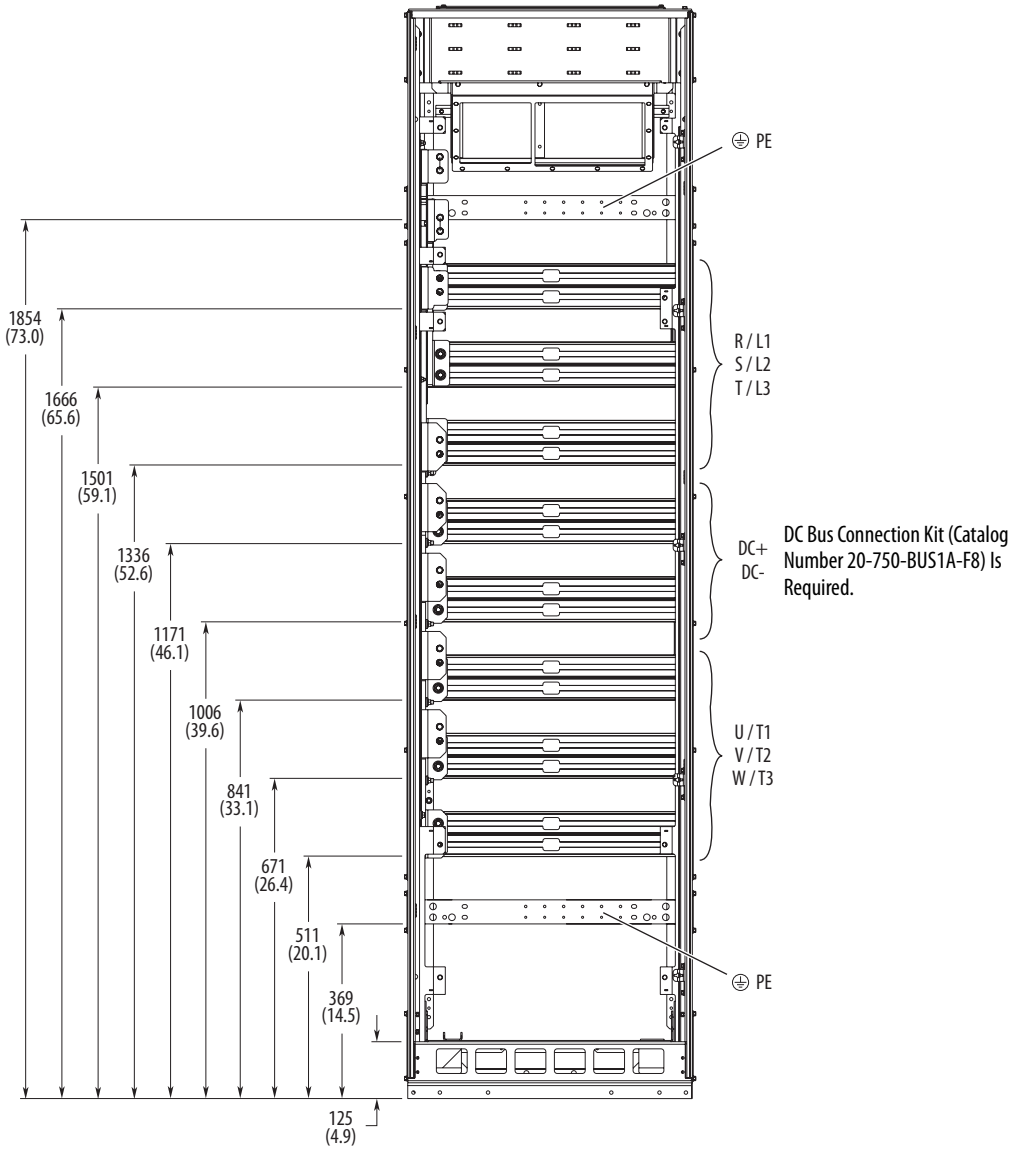

Dimensions are in millimeters and (inches).

IMPORTANT To connect to the DC bus bars, a PowerFlex 750-Series DC bus connection kit (catalog number 20-750-BUS1A-F8) is required.

Figure 86 - Bus Bar Dimensions (Common DC Input)

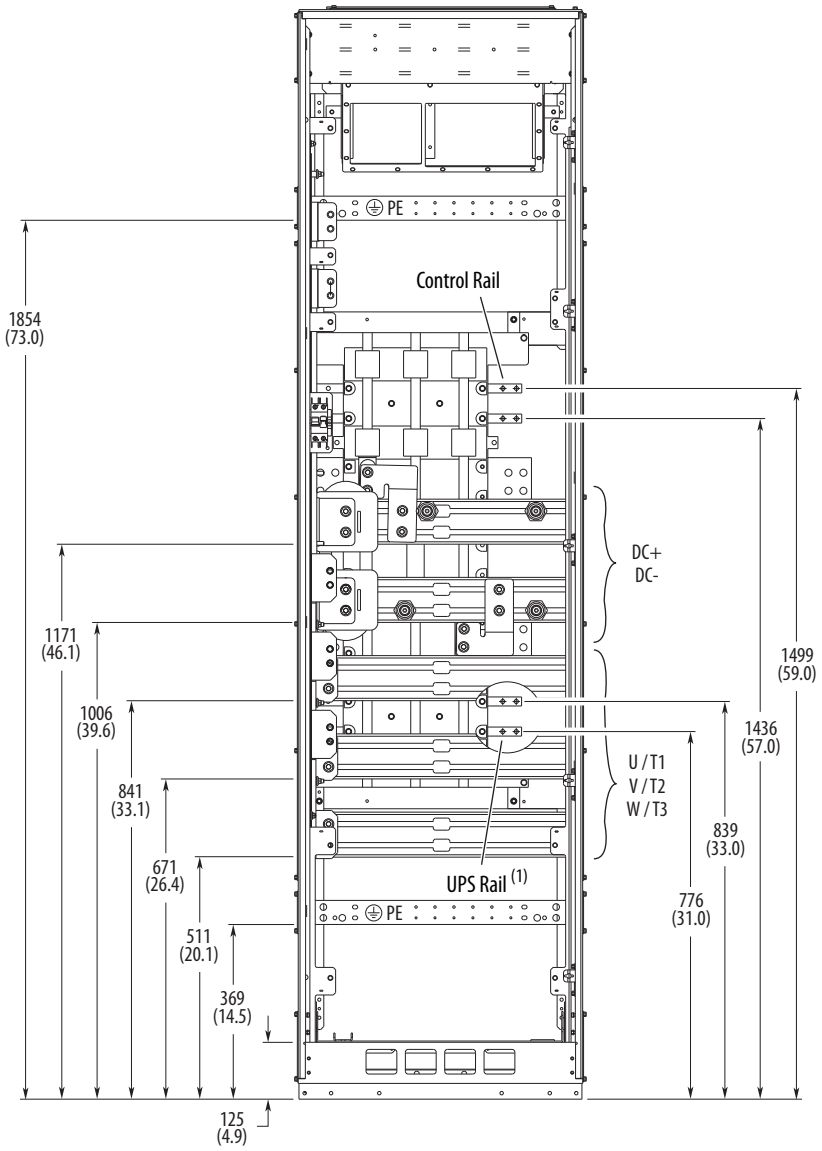

(1) The UPS rail is only installed when the P30 UPS control bus option is selected.

Dimensions are in millimeters and (inches).

Figure 87 - Bus Bar Dimensions (MCC Bus)

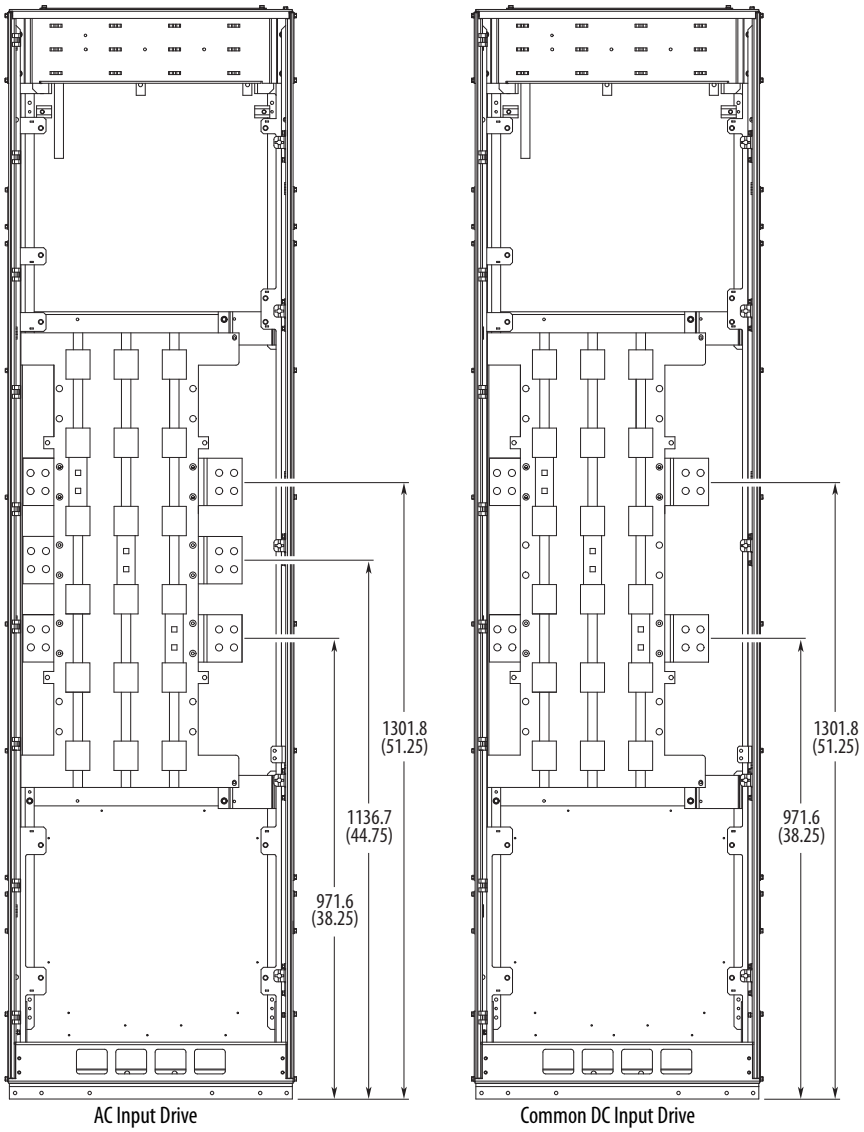

Dimensions are in millimeters and (inches).

Release Drive Assembly from Cabinet

To access the interior of the drive cabinet to complete installation and power wiring connections, remove the drive assembly from the cabinet.

IMPORTANT Before removing the drive assembly, be sure that the cabinet is in its intended installed position. Height adjustments to the roll-out cart cannot be made while carrying a drive.

1. Open the cabinet door.
2. Remove the side shields (see number 4 in Figure 88).
3. Remove the bus bar connector bolts (see numbers 1, 2, and 3 in Figure 88).
4. Disconnect the two captive bolts that connect the converter chassis to the exhaust vent (see number 5 in Figure 89).
5. Disconnect the four captive bolts that connect the converter chassis to the cabinet frame (see number 6 in Figure 89).

   IMPORTANT When removing both the inverter and converter drive sections from the cabinet, do not disconnect the captive bolts that hold the two sections together. The inverter-to-converter connector bolts are labeled number 8 in Figure 89.

6. Disconnect the six captive bolts that connect the inverter chassis to the cabinet frame (see number 7 in Figure 89).

Figure 88 - Side Shield and Bus Bar Connections

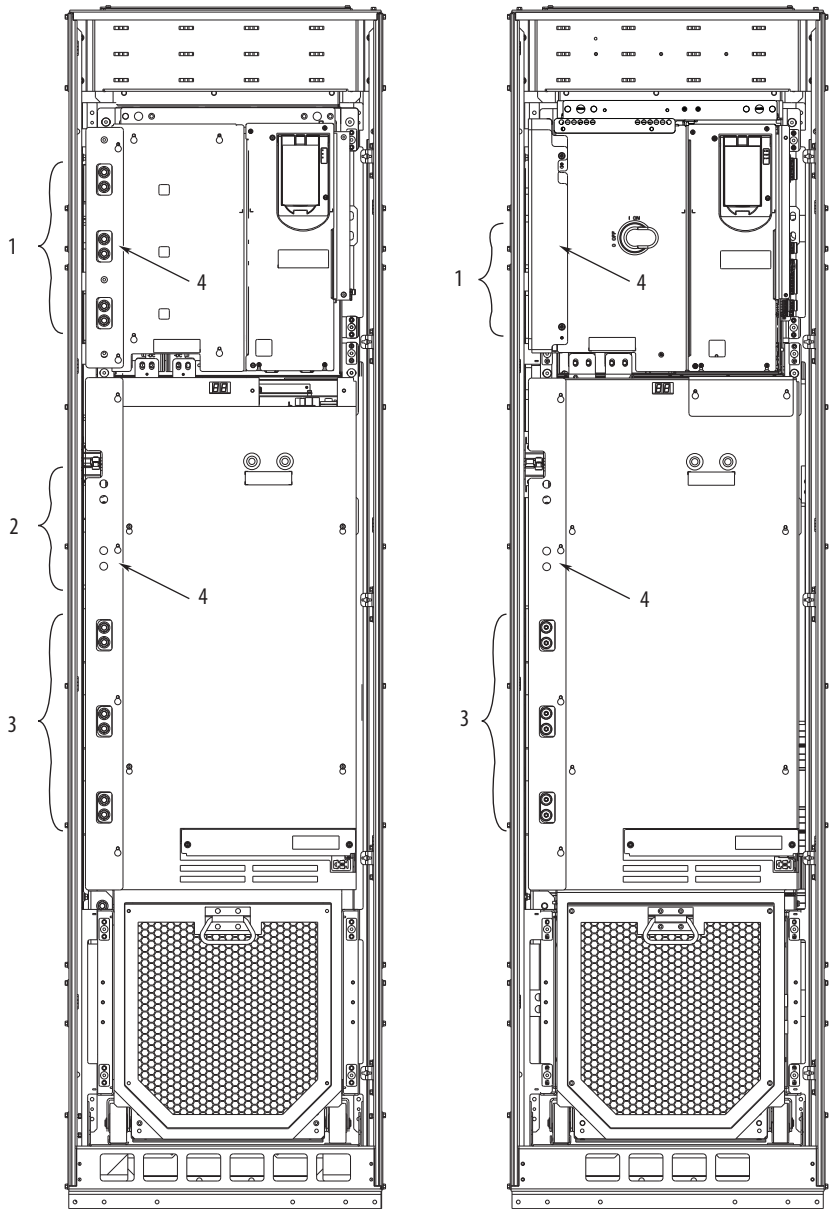

AC Input Drive

Common DC Input Drive

No.	Description	Torque, N•m (lb•in)	Recommended Tool
1	Converter input power connections.	22.6 (200)	T45 hexalobular (Torx)
2	DC bus connections (if equipped).		
3	Inverter output power connections.		
4	Side shields	2.8 (25)	T25 hexalobular (Torx)

Figure 89 - Drive-to-cabinet Connections

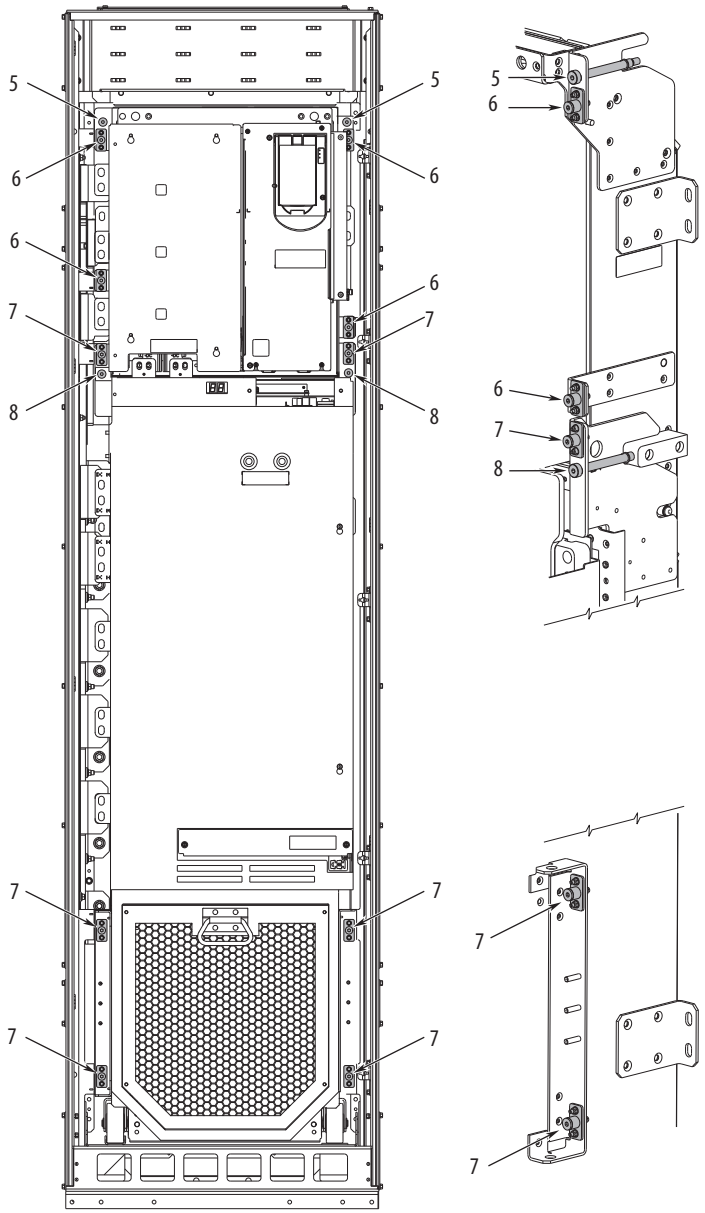

AC Input Drive Shown

No.	Description	Torque, N•m (lb•in)	Recommended Tool
5	Converter-to-vent hood anchor bolts (two places).	11.3 (100)	5 mm hex key (Allen)
6	Converter-to-cabinet anchor bolts (four places).		
7	Inverter-to-cabinet anchor bolts (six places).		
8	Inverter-to-converter connector bolts (two places).		

Fiber-optic Cables

Follow these guidelines for fiber-optic cables.

IMPORTANT	Fiber-optic cables have a minimum bend radius of 50 mm (2 in.). If cables are over bent, damage will occur.

IMPORTANT	For Frame 8 drives, the fiber-optic cables that are used to connect the fiber interface board to both the converter (AC input)/DC precharge (DC input) control board and the inverter power layer interface board must be the same length. The provided cables are 560 mm (22 in.) long.

IMPORTANT	For Frame 9 and larger drives, the fiber-optic cables that are used to connect the fiber interface board to the power layer interface board must be the same length. The provided cables are 2.8 m (110 in.) long.

Disconnect Drive Control Pod Wiring Connections

Frame 8 drives, with drive control pod installed, complete step 1 and step 2 of this procedure.

Frame 9 and larger drives, with drive control pod installed, complete step 1 through step 7 of this section.

If the drive control pod is mounted remotely, skip this section.

1. Remove the right front cover.

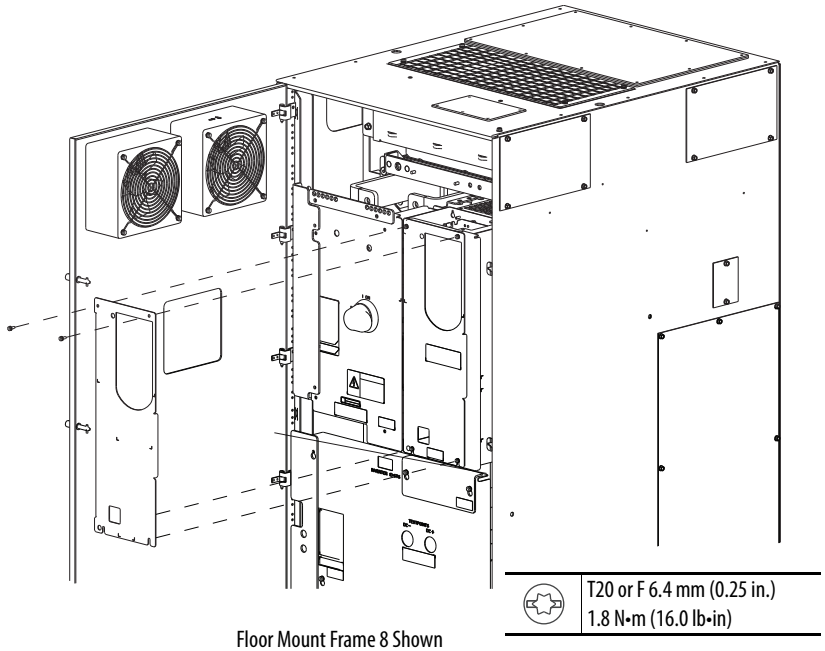

Floor Mount Frame 8 Shown

2. Disconnect the HIM cable (see number 1).
3. Disconnect the 24V wire harness from TB1 and P14 on the fiber interface board (see number 2).
4. Disconnect any fiber-optic cables from the fiber interface board. This step is not necessary on Frame 8 drives (see number 3).
5. Unlock the three cable supports along the left inside wall of the drive control pod (see number 4).
6. Open the releasable cable tie at the top of the drive control pod (see number 5).

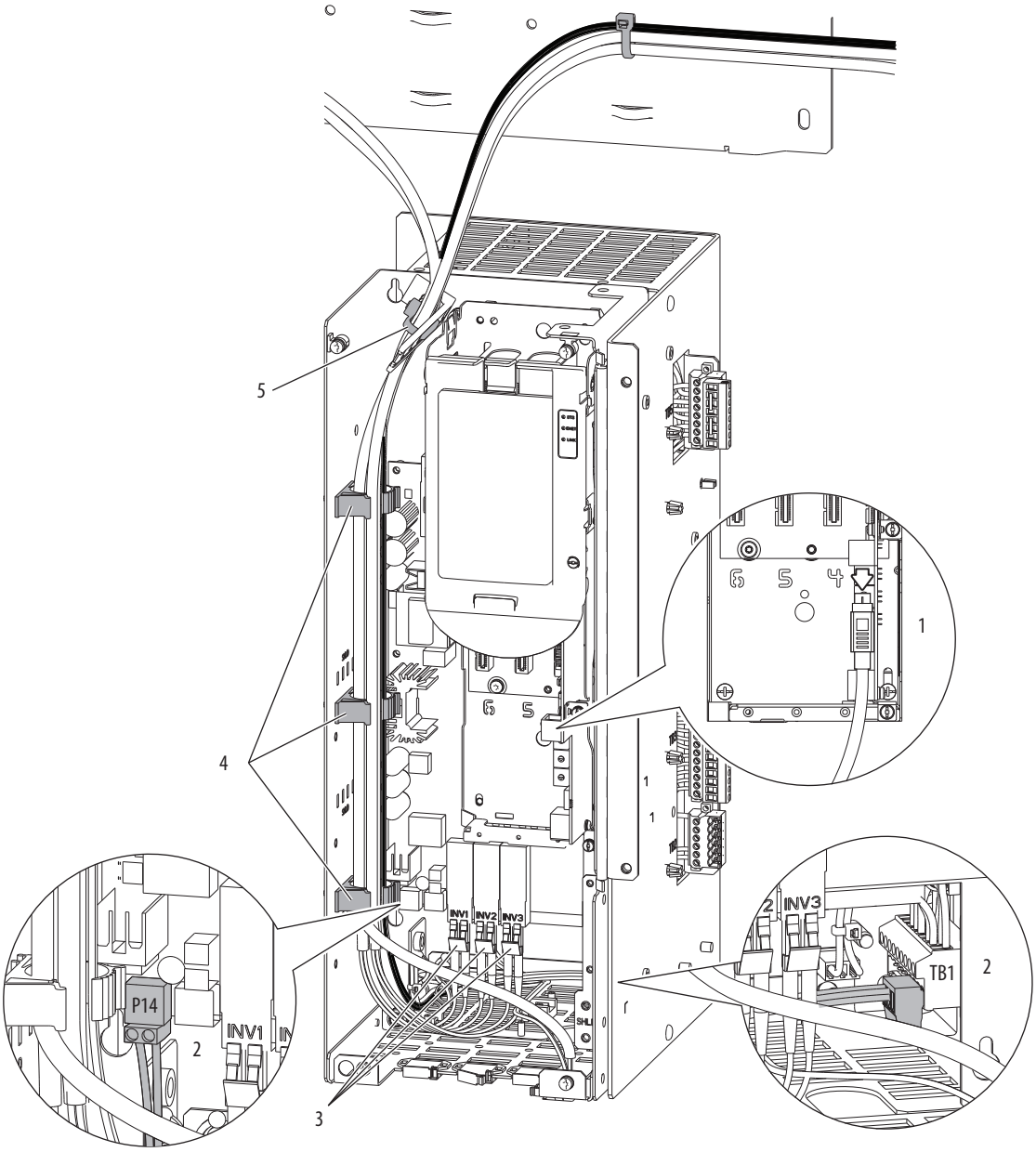

7. Without bending the cables to a radius less than 50 mm (2 in.), lift the 24V wire harness and fiber-optic cables out of the drive control pod. Support the cable bundle so it is out of the way of the drive assembly when it is rolled out of the cabinet.

Disconnect Wire Connections – No Drive Control Pod

This procedure applies to Frame 8 drives with a remotely mounted drive control pod (up to 23 m [75 ft] away) and to the cabinets on the right side of Frame 9 and larger drives.

1. Remove the right front cover.

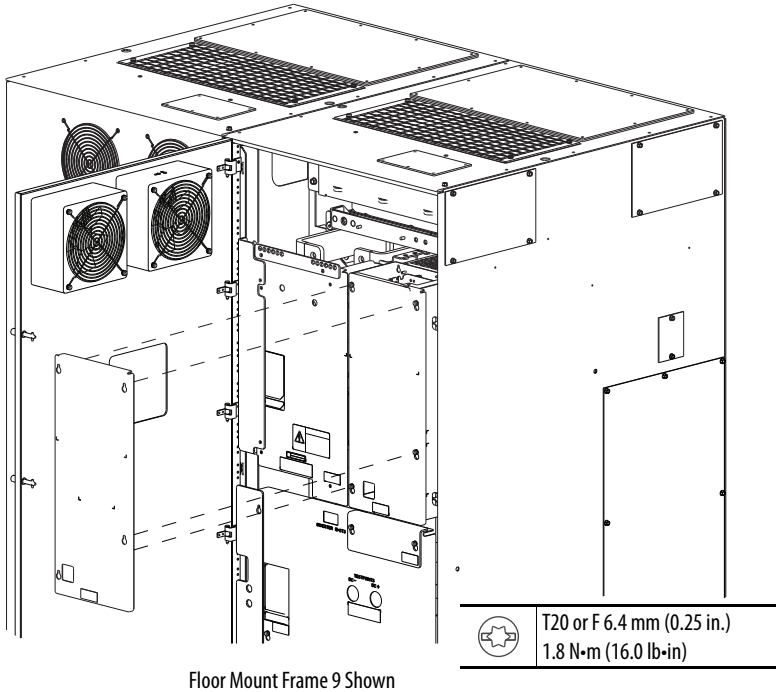

Floor Mount Frame 9 Shown

2. Disconnect the 24V wire harness from TB1 (see number 1).
3. Disconnect the fiber-optic cable from INV on the power layer interface board (see number 2).

4. Open the three releasable cable ties along the right inside wall of the drive control pod (see number 3).

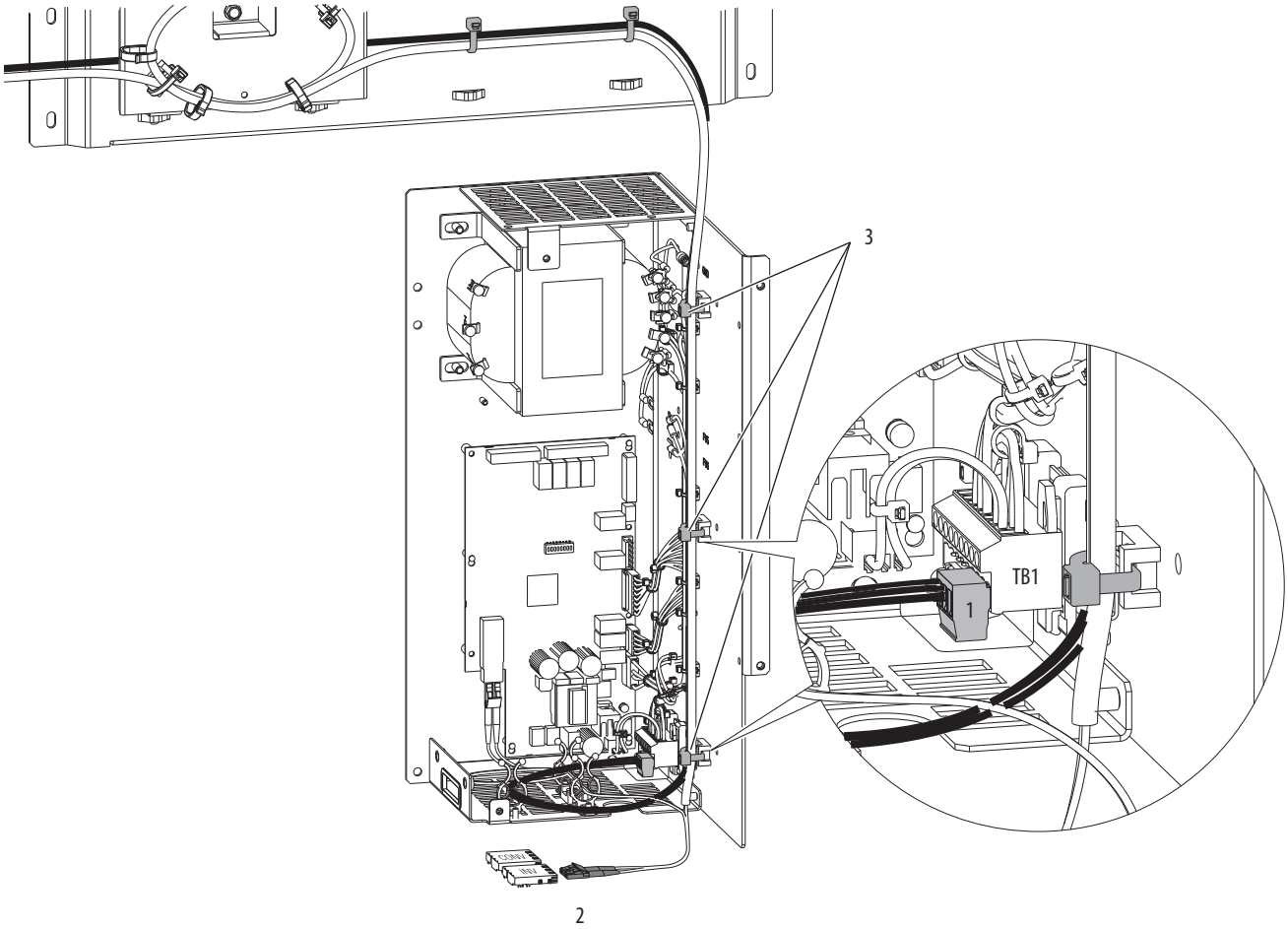

5. Without bending the cables to a radius less than 50 mm (2 in.), lift the 24V wire harness and fiber-optic cable out of the drive control pod. Support the cable bundle so it is out of the way of the drive assembly when it is rolled out of the cabinet.

Disconnect Control and Power Wire Harnesses

AC Input Drives

1. Disconnect the cabinet fan/cabinet blower assembly wiring harness from TB2-3 and TB2-4 (see number 1).
2. Disconnect the cabinet shunt trip harness (if used) from TB2-1 and TB2-2 (see number 2).

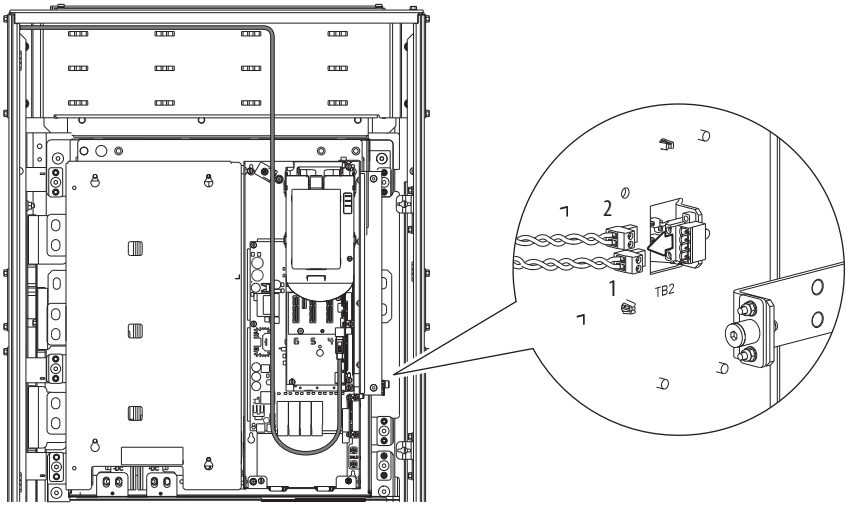

Disconnect DC Bus Fuse Wire Harness

AC Input Drives Floor Mount Frames 9 and Larger

Disconnect the DC bus wiring harness from TB6 (see number 1).

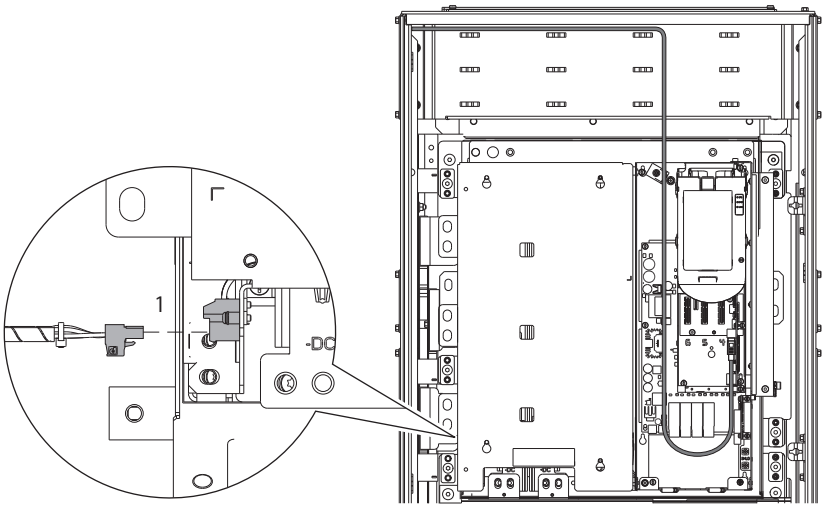

Common DC Input Drives

1. Disconnect the cabinet fan /cabinet blower assembly harnesses from TB2-5 and TB2-6 (see number 1).
2. Disconnect the 120/240V control power input harness from TB2-3 and TB2-4 (see number 2).
3. Disconnect 120V UPS control power input (if used) from TB2-1 and TB2-2 (see number 3).
4. Disconnect the digital I/O wiring (if used) from TB3 (see number 4).
5. Disconnect the door interlock wiring (if used) from TB4 (see number 5).
6. Disconnect the 120V UPS control power output wiring (if used) from TB5 (see number 6).

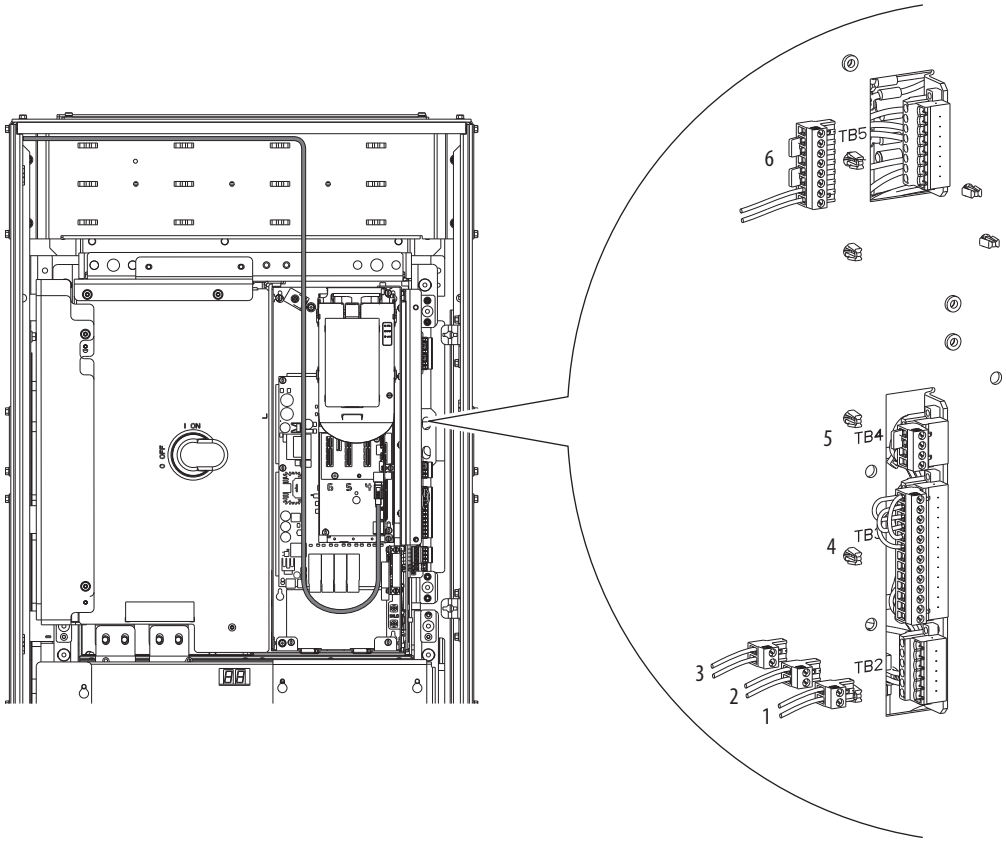

Release Cabinet Options Assembly from Cabinet

To access the interior of the cabinet options cabinet to complete installation and power wiring connections, remove the cabinet options assembly from the cabinet.

IMPORTANT Before removing the cabinet options assembly, be sure that the cabinet is in its intended installed position. Height adjustments to the roll-out cart cannot be made while carrying the assembly.

1. Open the cabinet door.
2. Disconnect the six captive bolts that connect the cabinet options assembly to the cabinet frame (see number 1).

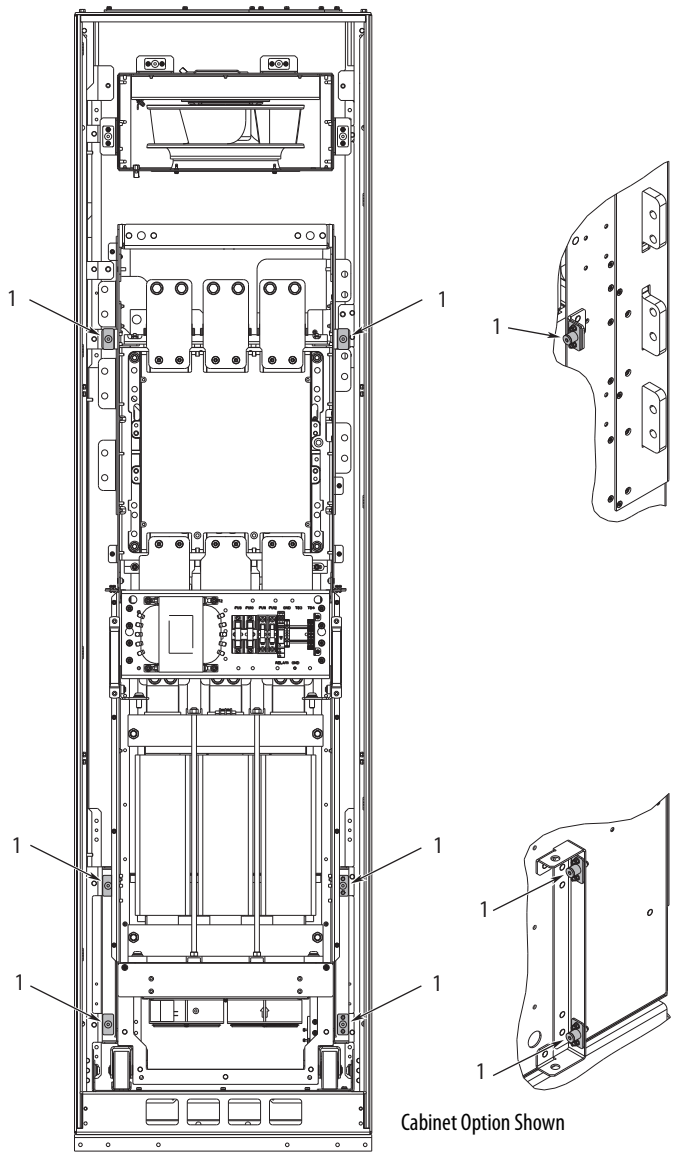

Cabinet Option Shown

No.	Description	Torque	Recommended Tool
1	Cabinet options assembly-to-cabinet anchor bolts (six places).	11.3 N•m (100 lb•in)	5 mm hex key (Allen)

3. Disconnect the wiring harnesses and bus connections (see numbers 2, 3, 4, and 5).

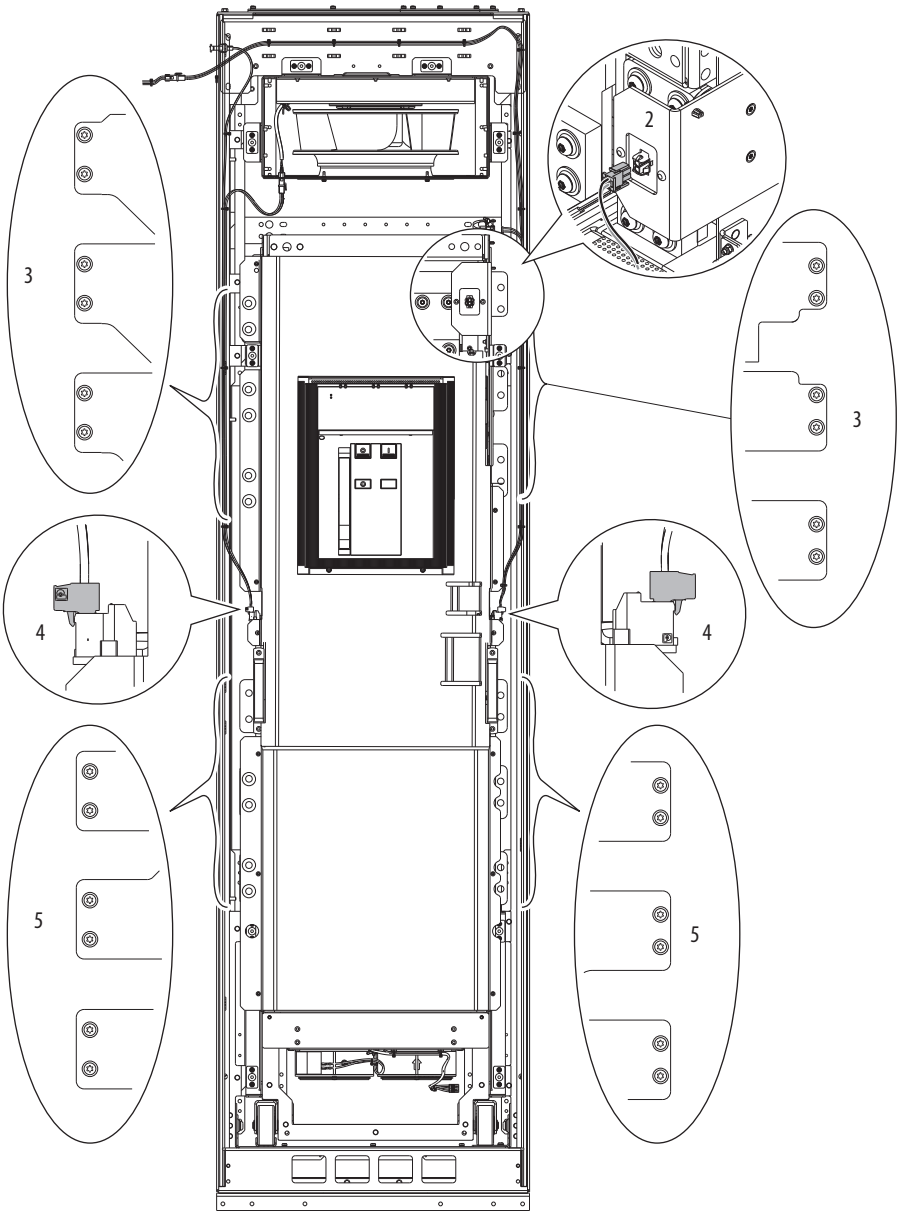

No.	Description	Torque	Recommended Tool
2	Thermostat connection (plug).	N/A	N/A
3	AC input connections (12 places).	22.4 N•m (200 lb•in)	T45 Hexalobular driver with 457 mm (18-in.) extension
4	Terminal block connections (plugs).	N/A	N/A
5	Output reactor connections (12 places).	22.4 N•m (200 lb•in)	T45 Hexalobular driver with 457 mm (18-in.) extension

Prepare the Roll-out Cart

The roll-out cart, catalog number 20-750-CART1-F8, is required to remove the drive assembly from Floor Mount Frame 8...10 drive cabinets.

Figure 90 - Roll-out Cart Dimensions

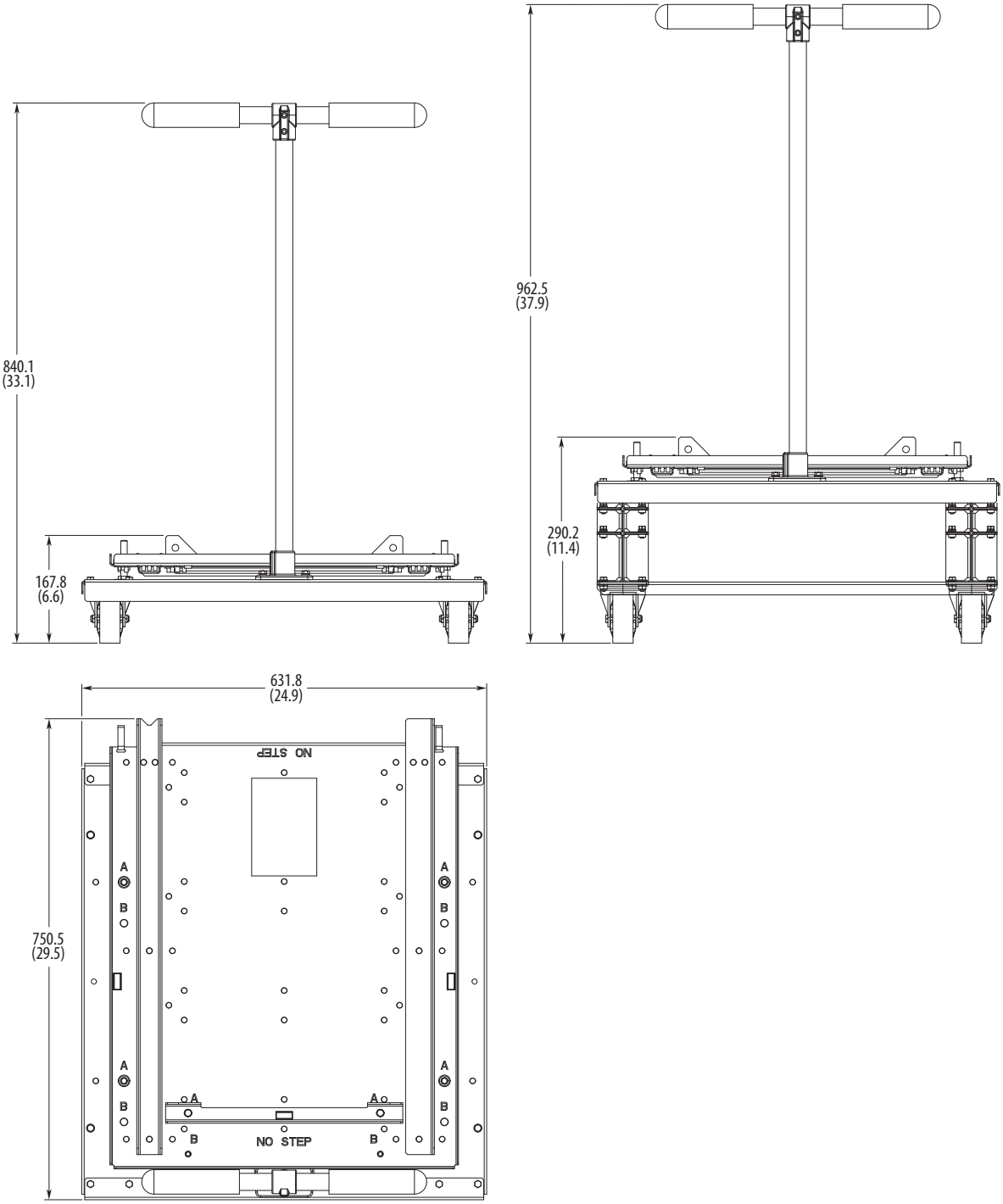

Dimensions are in millimeters and (inches).
Approximate weight: 27.2 kg (60 lb)
See page 138 for spacer height combinations.

The roll-out cart can be adjusted for both reach and height.

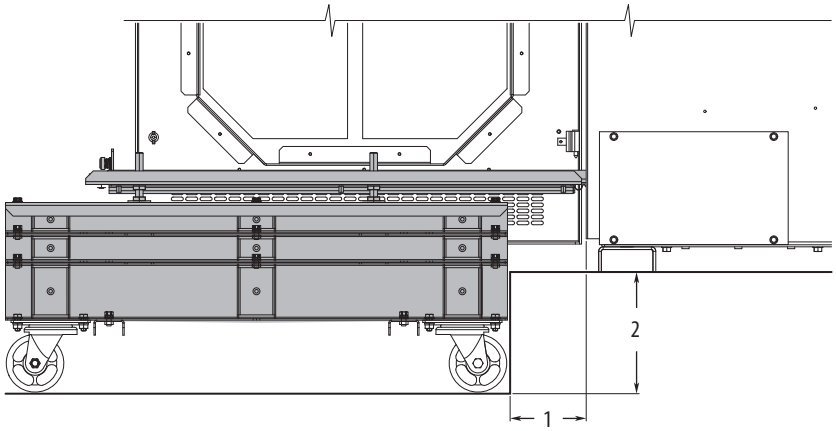

No.	Description
1	Adjustment for curb offset/reach: 0…114 mm (0…4.5 in.)
2	Adjustable curb height: 0…182 mm (0…7.2 in.)

Figure 91 - Roll-out Cart Features

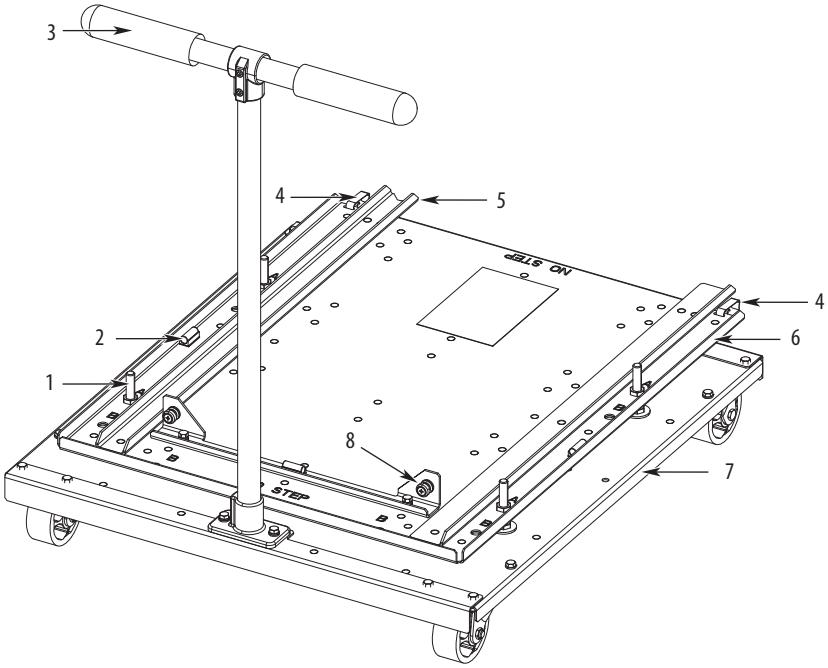

No.	Description
1	Threaded studs and nuts allow precision height and level adjustments (four positions)
2	Bubble levels help with fine adjustment of the cart deck (three positions)
3	Handle
4	Retaining clips positively engage the cart with the drive cabinet (two positions)
5	Alignment track keeps the drive in the correct position
6	Cart deck
7	Cart chassis
8	Drive stop and capture screws

Adjust Roll-out Cart Height Using Threaded Studs and Nuts

The height of the roll-out cart deck can be adjusted using the threaded leveling studs and nuts:

- Maximum height = 155.5 mm (6.1 in.)
- Minimum height = 116 mm (4.6 in.)
- Adjustment range = 30 m (98.4 ft) (1.2 in.) up, 9.5 mm (0.4 in.) down from the factory setting of 125.5 mm (4.9 in.)

1. Loosen and back off the top nuts on the four threaded level studs (see number 1).

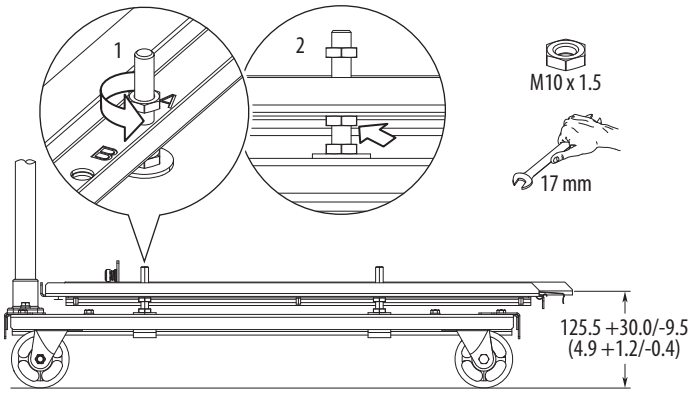

2. Turn the bottom supporting nuts to raise or lower the cart deck (see number 2). Turn the nut clockwise to lower the deck. Turn the nut counter-clockwise to raise the deck.

   Make uniform half-turn adjustments to each of the four threaded studs in an alternating pattern to help prevent binding and maintain a level orientation.

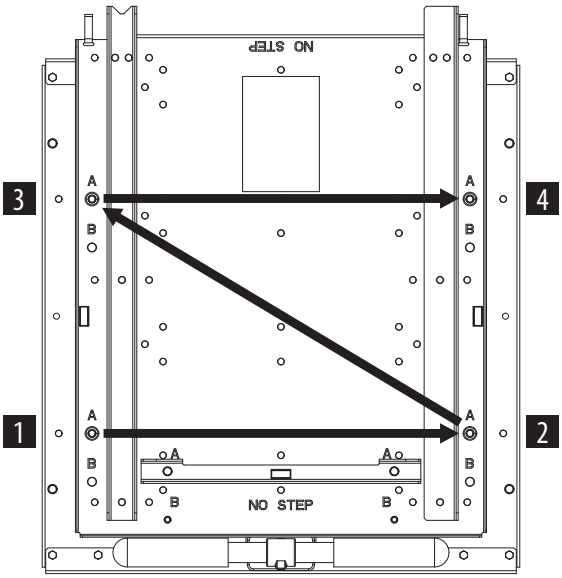

3. To verify that the deck is level, use the three bubble levels.
4. Tighten the top nuts.

Adjust Roll-out Cart Height Using Spacers

The height of the roll-out cart deck can be adjusted using the I-beam spacers provided.

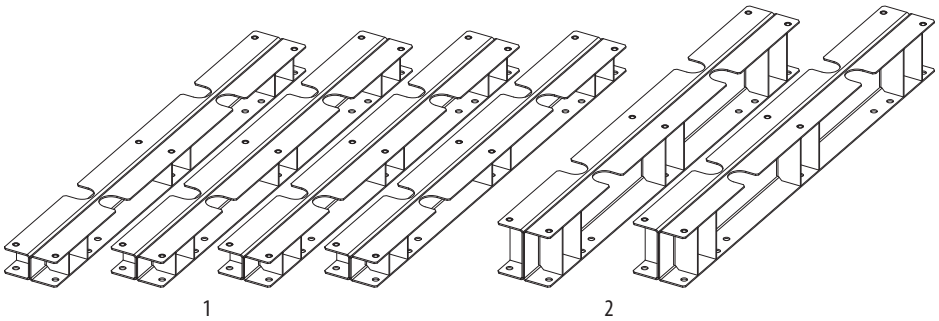

No.	Description
1	Four 38.1 mm (1.5 in.) spacers
2	Two 76.2 mm (3.0 in.) spacers

Spacer Height Combinations

Each of the base heights that are shown here have an adjustment range of +30.0 mm (+1.2 in.) and -9.5 mm (-0.4 in.).

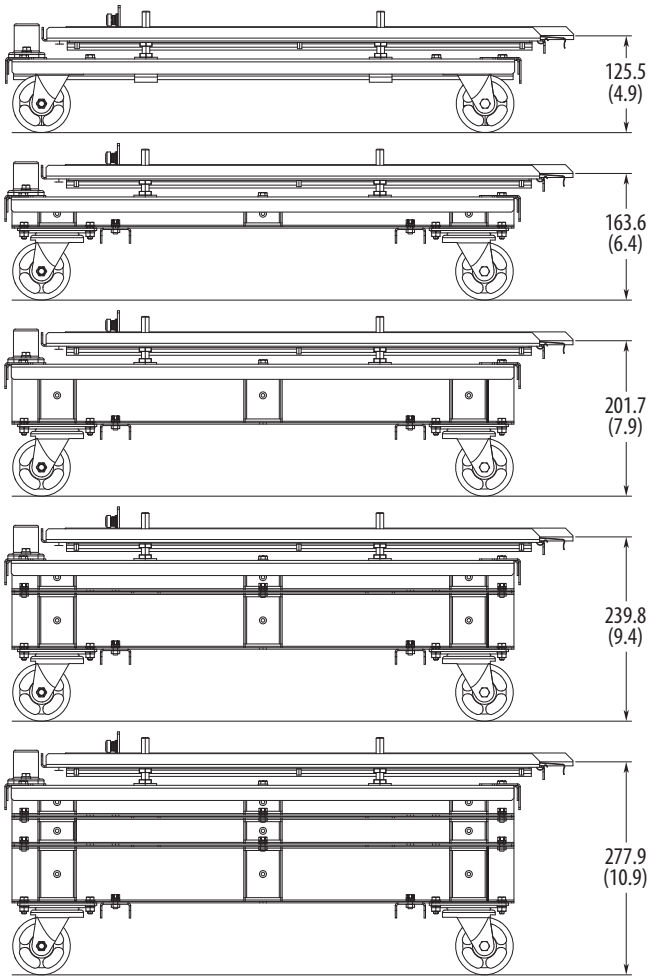

1. Remove the roll-out cart deck by removing the top nuts of the four threaded level studs.

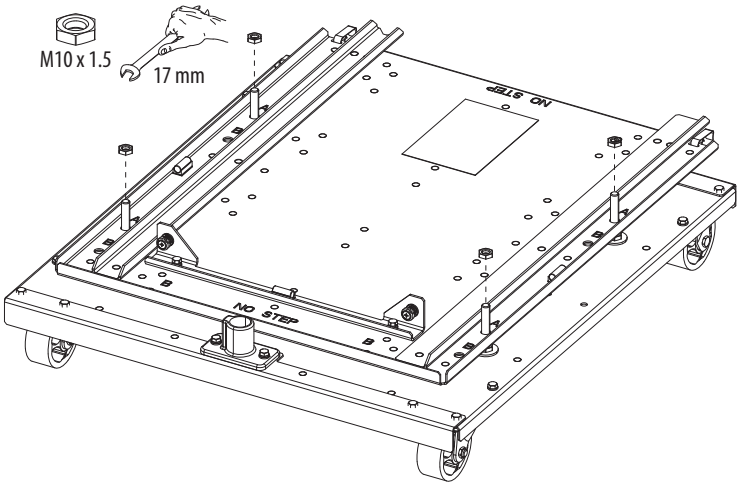

2. Lift the deck off the four threaded level studs.

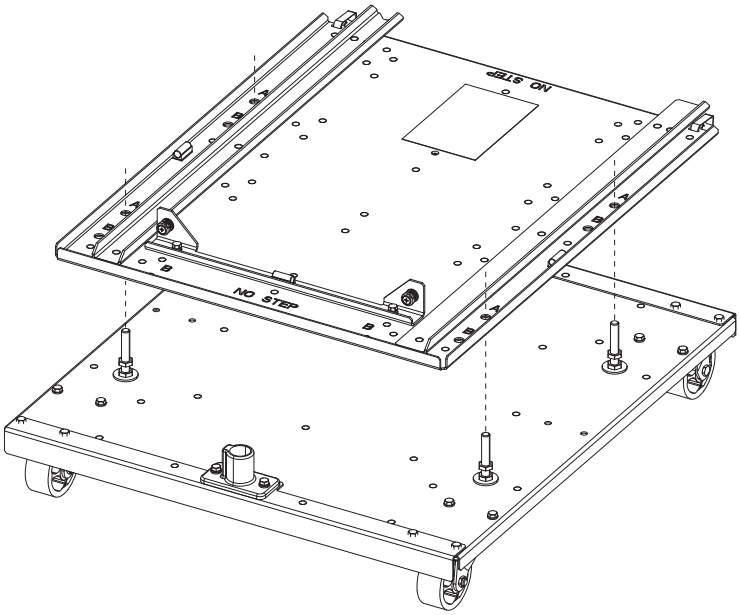

3. Remove the bolts that secure the casters to chassis.

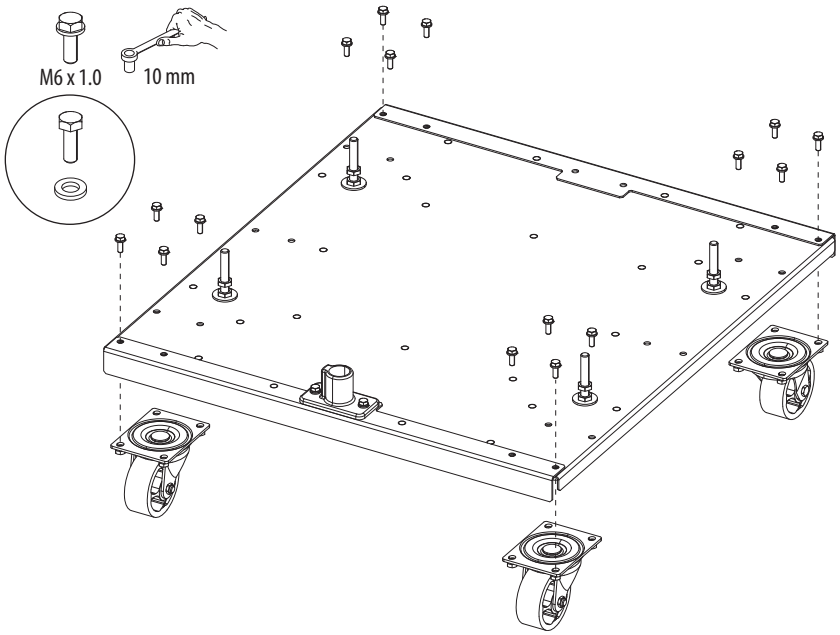

4. Select the spacer or spacers required. Combine spacers using bolts provided as needed.

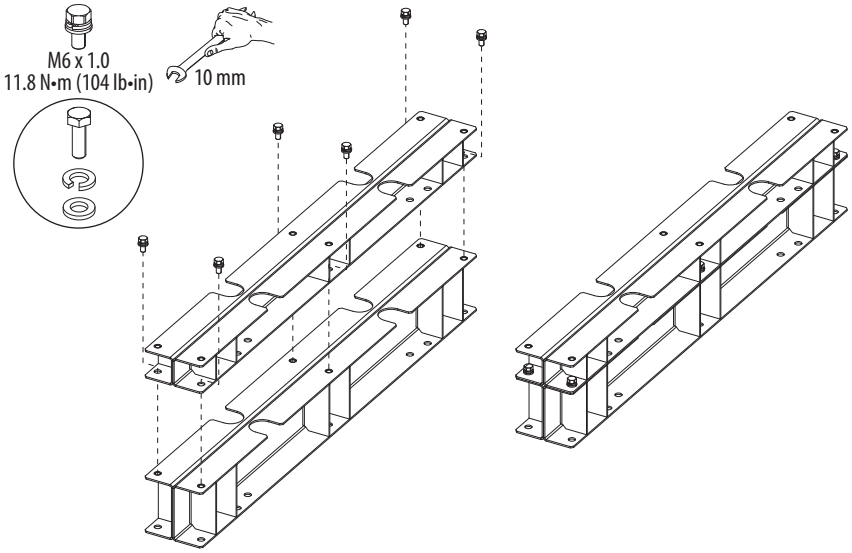

5. Bolt the spacer or spacer assembly to the bottom of the cart chassis.

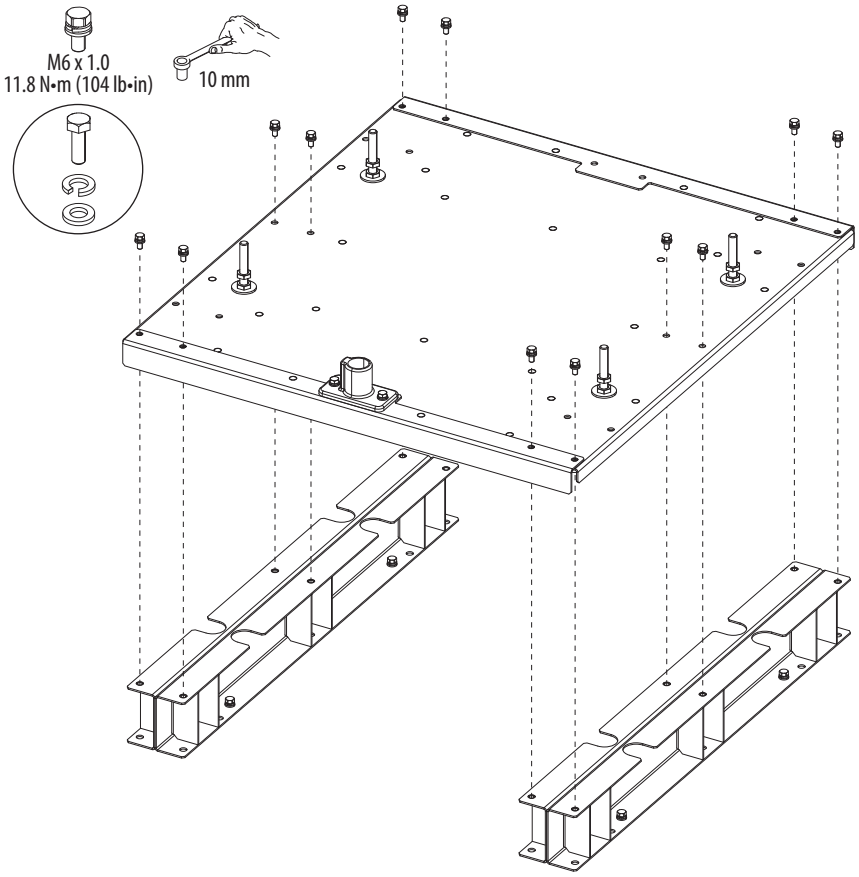

6. Bolt the cross beams to the bottom of the spacers.

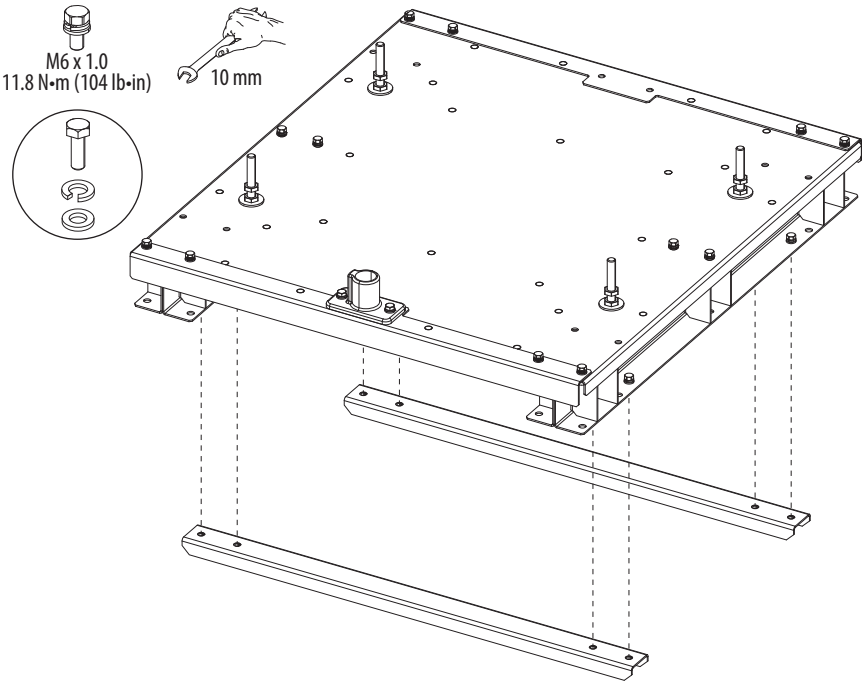

7. Bolt the casters to the bottom spacer.

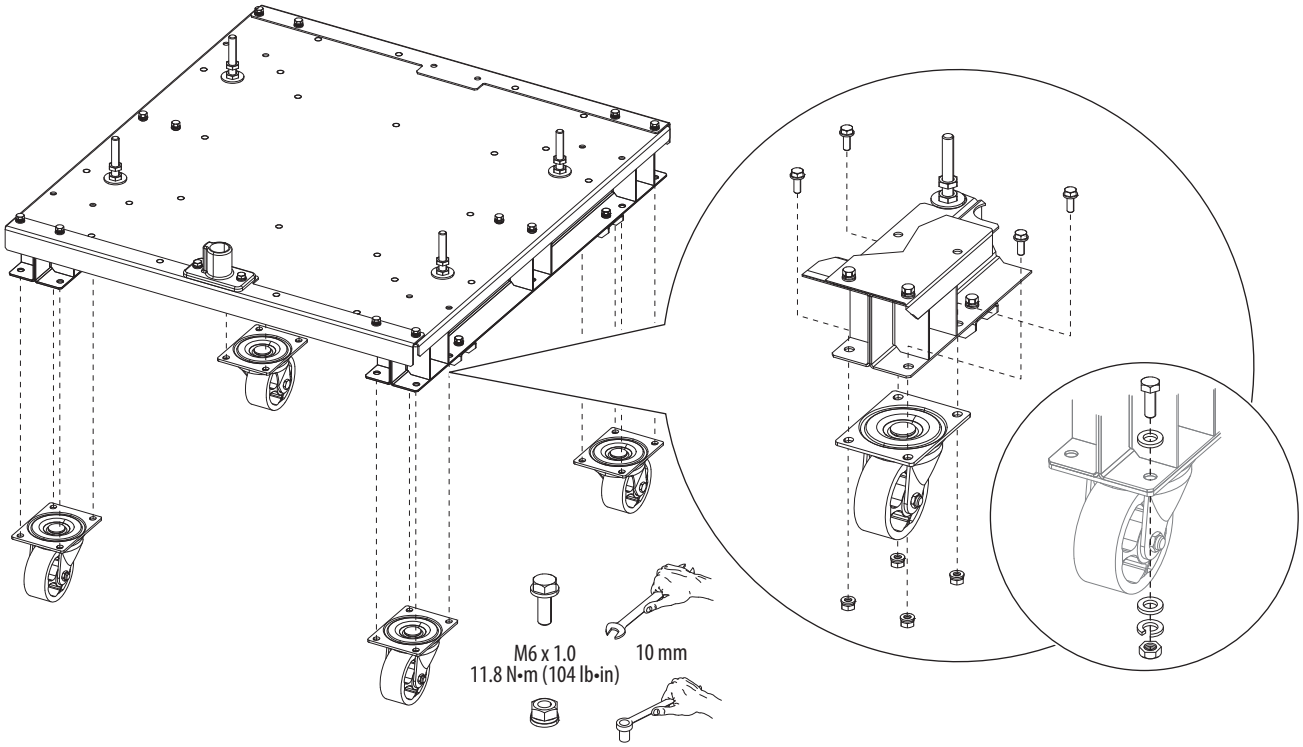

8. Determine reach required and install the deck in position A or position B. See the next section for details.

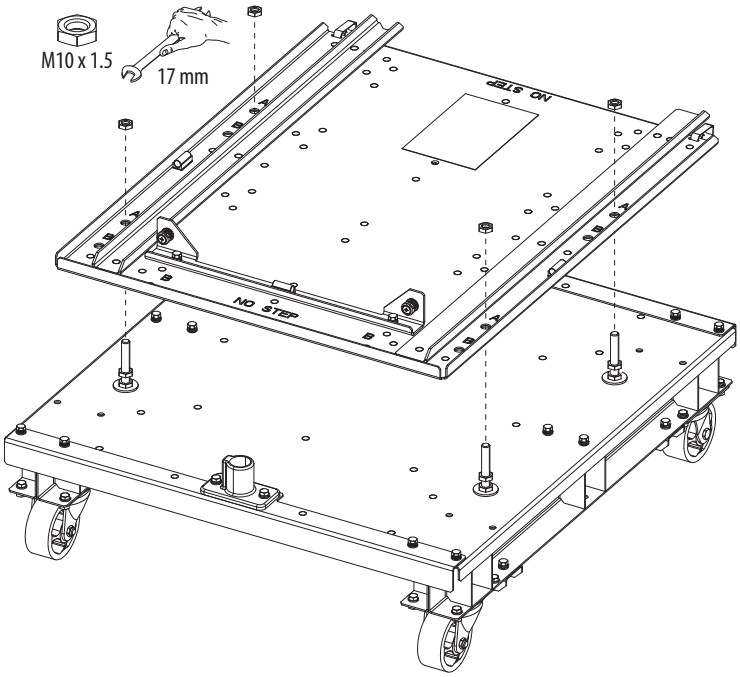

Adjust Roll-out Cart Reach

See Figure 92 and Figure 93 to adjust the reach of the roll-out cart.

Figure 92 - Reach Position A

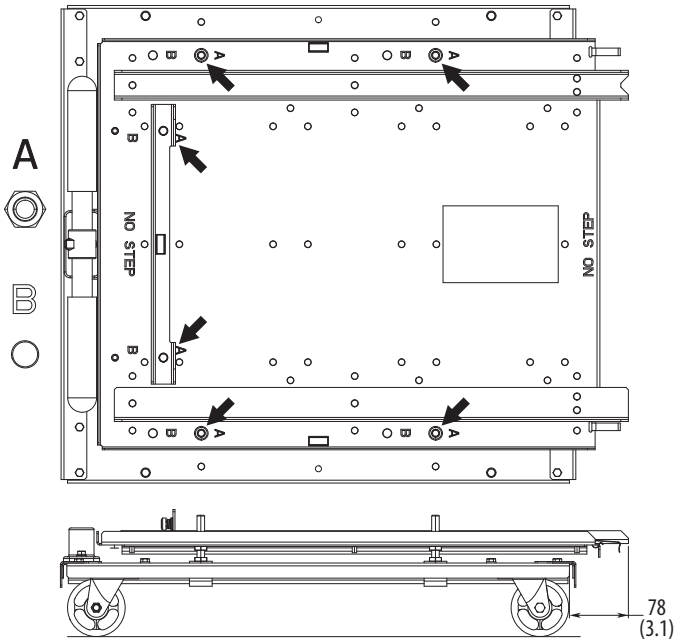

Figure 93 - Reach Position B

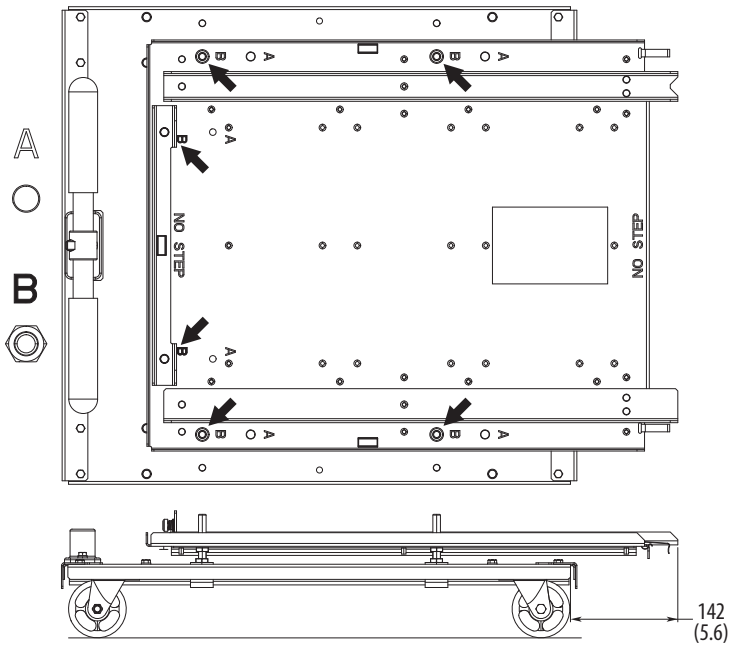

ATTENTION: A tip-over hazard exists. To guard against death, serious personal injury, and/or equipment damage, verify the drive stop (see Figure 91) is in the same position as the corresponding threaded leveling studs. The weight of the drive must be evenly distributed over the cart wheels.

Remove Drive Assembly or Cabinet Options Assembly

This section assumes that the steps in Release Drive Assembly from Cabinet or Release Cabinet Options Assembly from Cabinet and Prepare the Roll-out Cart have been completed.

1. Carefully push the prepared roll-out cart to the front of the drive cabinet.

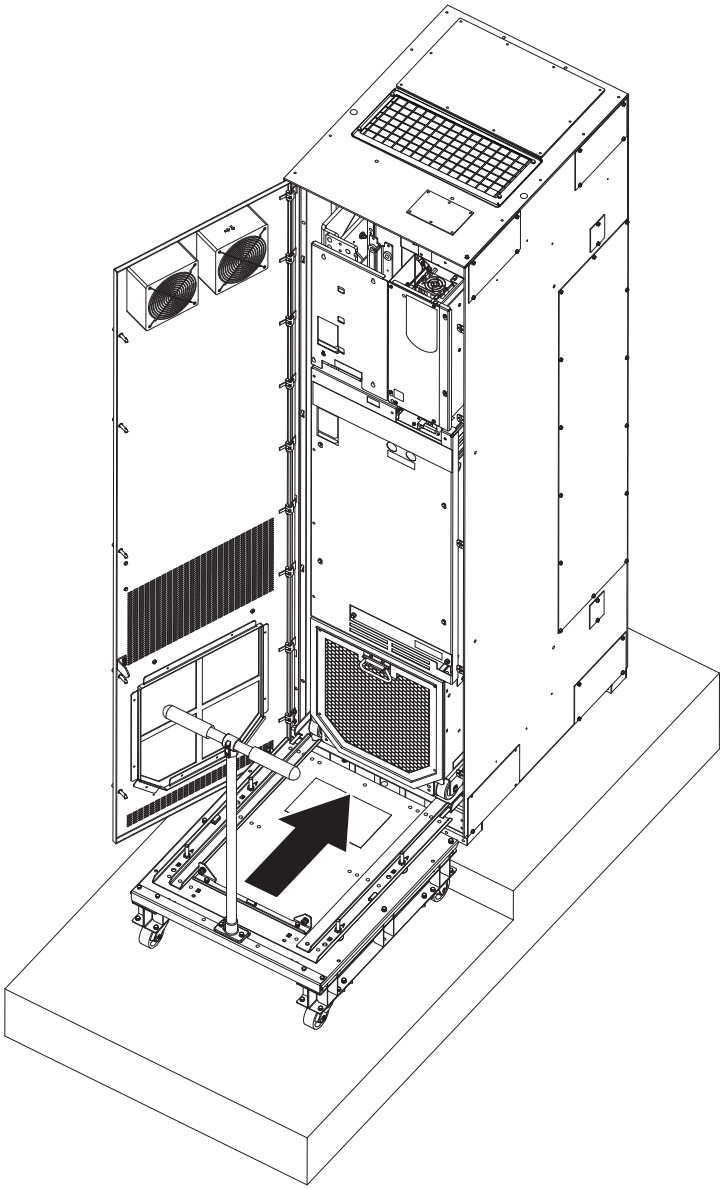

2. Use the alignment track to center the roll-out cart and engage the two retaining clips.

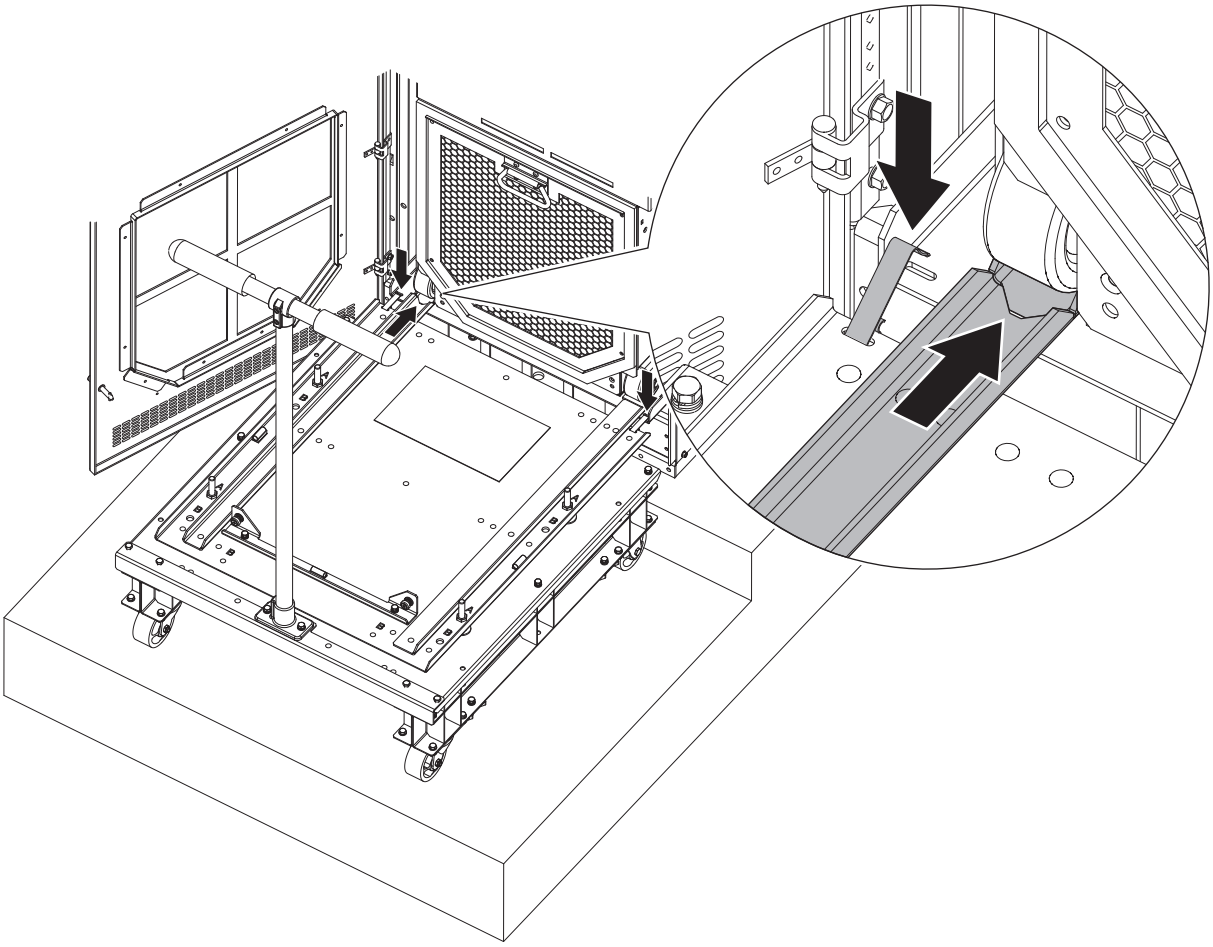

Drive Assembly – Floor Mount Frames 8…10

To pull the drive assembly on to the roll-out cart, slowly and smoothly pull the handle above the fan intake.

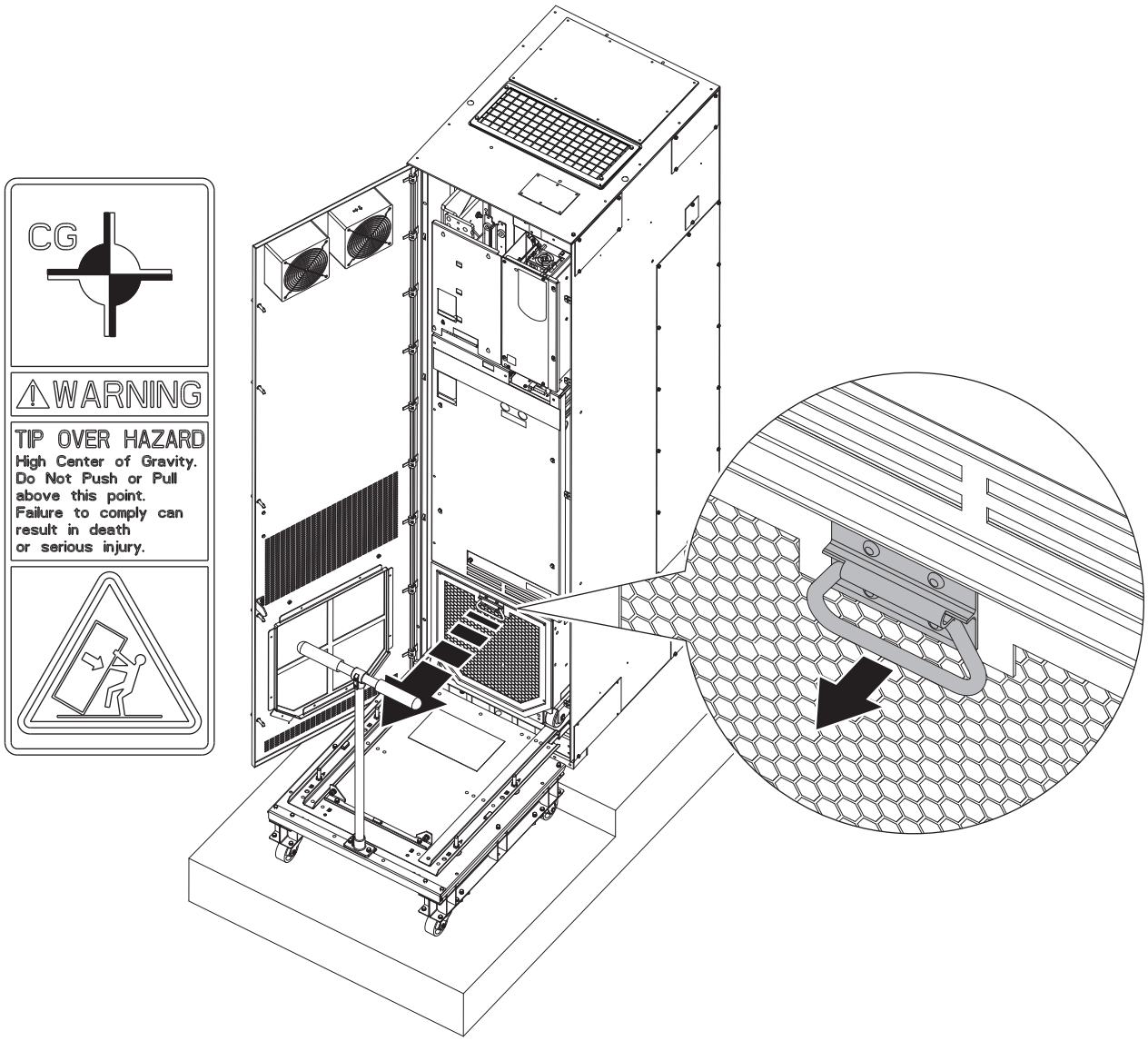

ATTENTION: This drive has a high center of gravity and a tip-over hazard exists. To guard against death, serious personal injury, and/or equipment damage, do not subject the drive to high rates of acceleration or deceleration while transporting. Do not push or pull above the points that are indicated on the drive.

Cabinet Options Assembly – Floor Mount Frames 9 and 10

To pull the drive assembly on to the roll-out cart, slowly and smoothly pull the handle.

See page 134 for information on related electrical connections.

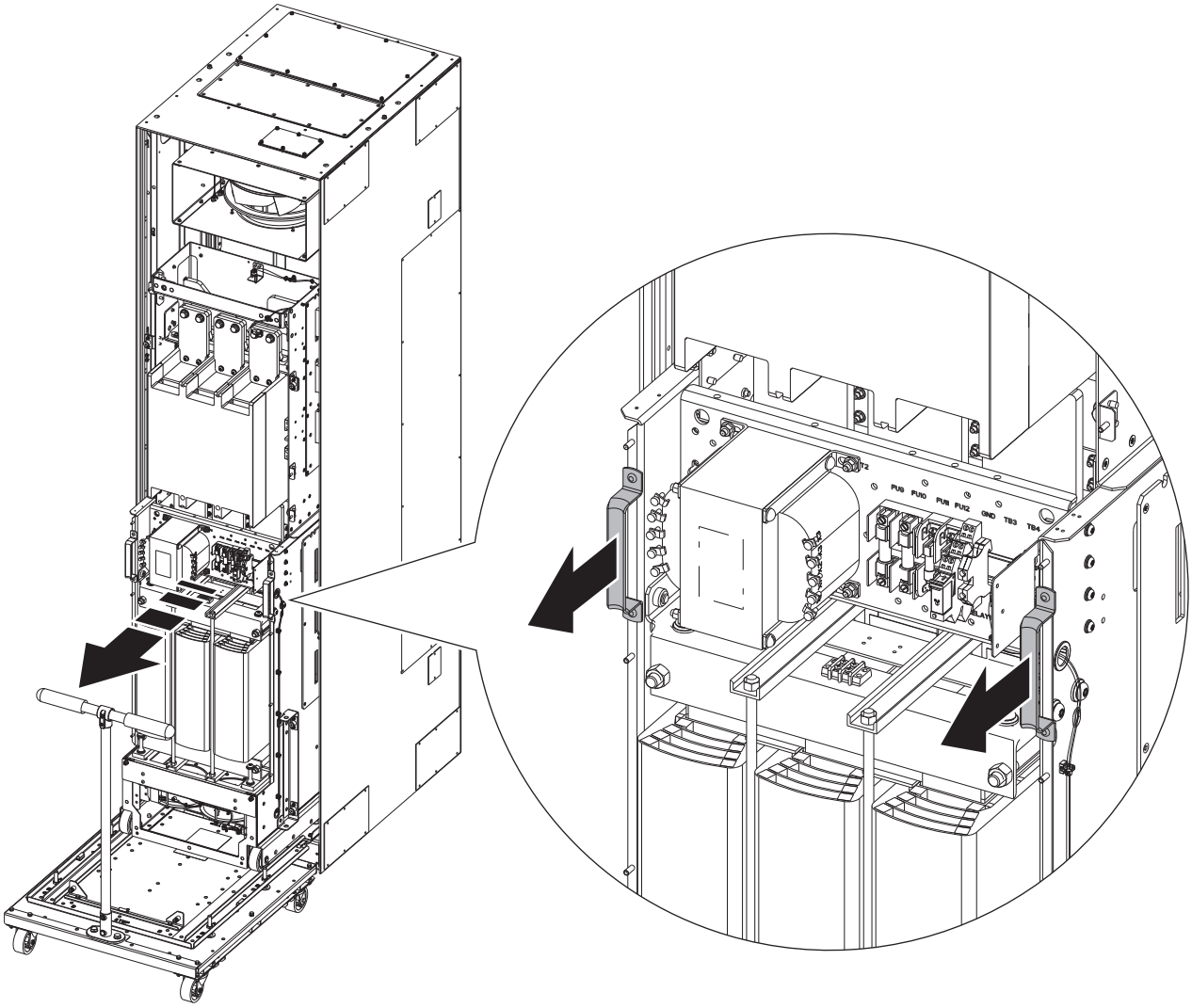

3. Engage and tighten the capture screws to lock the drive assembly or cabinet options assembly to the Stop.

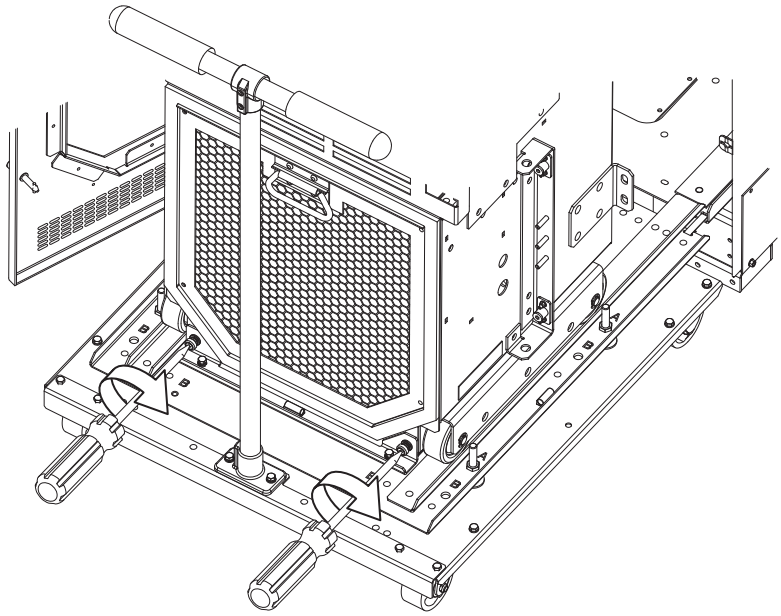

4. To roll the drive assembly or cabinet options assembly away from the cabinet, release the retaining clips.

ATTENTION: The drive assembly and cabinet options assembly have a high center of gravity and a tip-over hazard exists. To guard against death, serious personal injury, and/or equipment damage, do not subject the drive assembly or cabinet options assembly to high rates of acceleration or deceleration while transporting. Do not push or pull above the points indicated.

IMPORTANT Take precautions when using the roll-out cart to move the drive.

- Only use the roll-out cart to move the drive or cabinet options a short distance to gain access to the cabinet interior.
- Do not attempt to move the drive or cabinet options on the roll-out cart with the handle alone. The roll-out cart handle is designed for positioning the empty cart.
- Only use the cart on a smooth and level surface.
- Verify that the path for the cart is clear of debris and obstacles.
- Avoid sloped and rough surfaces.
- Always move the drive or cabinet options slowly.

Remove DC Back Bus Guard – Common DC Input Drives

To complete the power wiring connections in the common DC input drive cabinet, remove the DC back bus guard to access the power terminals (see number 2).

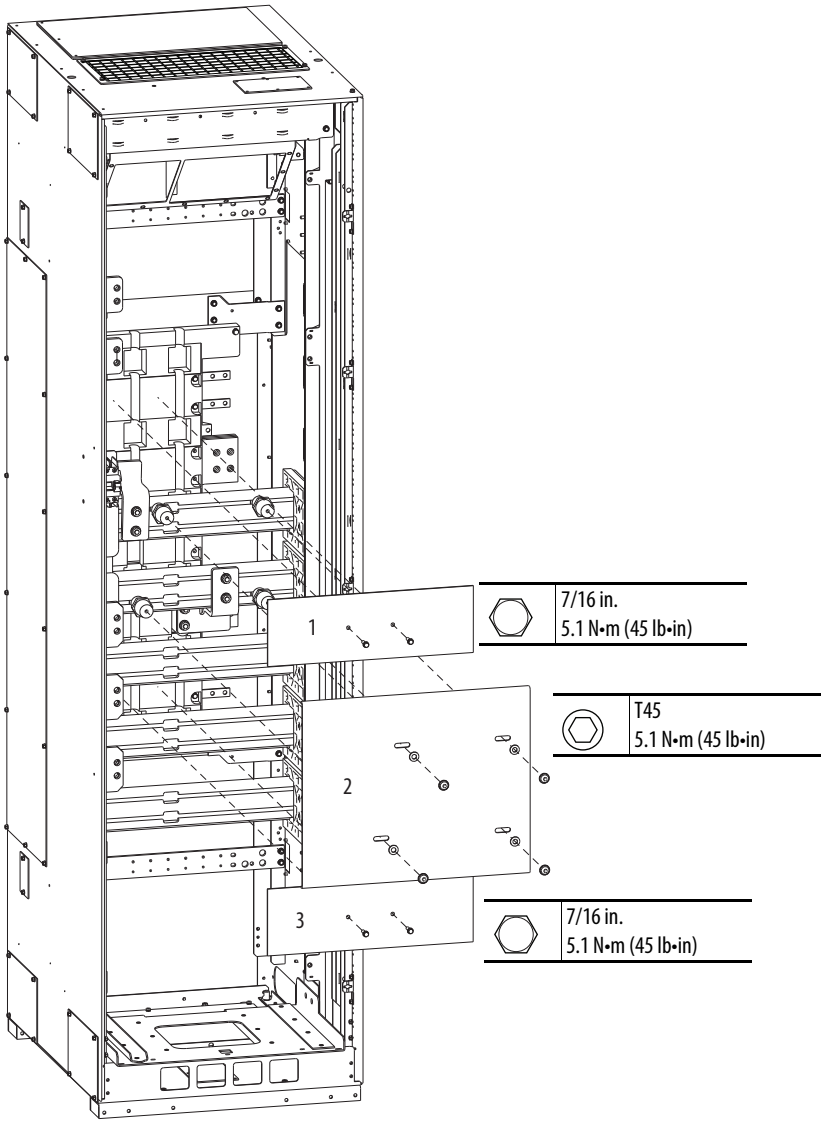

No.	Description
1	120/240V control rail guard
2	DC back bus guard
3	120V interruptible power supply (UPS) rail guard

Reinstall Drive Assembly or Cabinet Options Assembly

After cabinet installation and power wiring are complete, reinstall the drive assembly or cabinet options assembly in the cabinet.

1. Align the roll-out cart and drive assembly or cabinet options with the cabinet and lock into position according to the procedures described in Remove Drive Assembly or Cabinet Options Assembly on page 144.
2. Disengage the capture screws and slowly push the drive assembly or cabinet options assembly into the cabinet.
3. Secure the assembly-to-cabinet connections then the bus connections. See Side Shield and Bus Bar Connections on page 125 for torque values.

Notes:

Power Wiring

Most start-up difficulties are the result of incorrect wiring. Verify that all wiring is done as instructed. Read and understand all items in this chapter before you begin the installation.

ATTENTION: The following information is a guide for proper installation. Rockwell Automation does not assume responsibility for the compliance or the noncompliance to any code, national, local or otherwise for the proper installation of this drive or associated equipment. A hazard of personal injury and/or equipment damage exists if codes are ignored during installation.

Grounding Requirements

Ground impedance must conform to the requirements of national and local industrial safety regulations and/or electrical codes. Periodically check the integrity of all ground connections.

IMPORTANT The drive Safety Ground-PE must be connected to system ground.

Recommended Grounding Scheme

Use one point (PE only) grounding scheme. Some applications can require alternate grounding schemes, see Wiring and Grounding Guidelines for Pulse-width Modulated (PWM) AC Drives, publication DRIVES-IN001, for more information. These applications include installations with long distances between drives or drive line-ups, which could cause large potential differences between the drive or line-up grounds.

For installations within a cabinet, use one safety ground point or ground bus bar connected directly to building steel. All circuits including the AC input ground conductor can be grounded independently and directly to this point/bar.

Figure 94 - Typical Grounding

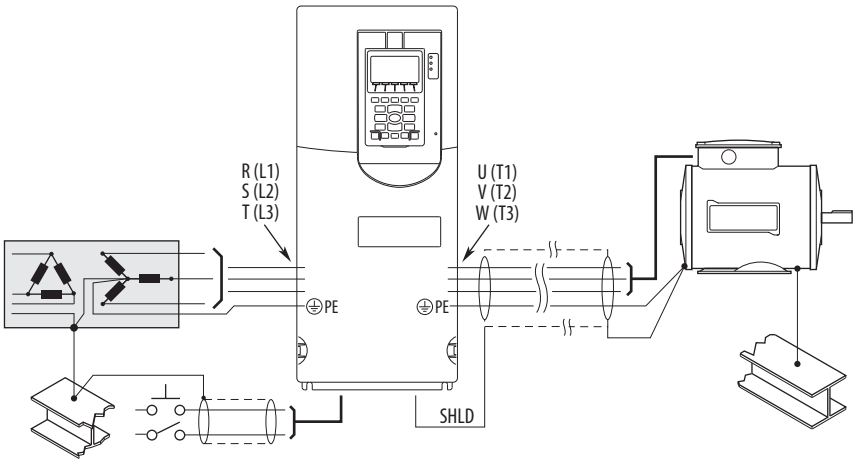

Shield Termination – SHLD

The shield terminal (see page 157) provides a grounding point for the motor cable shield. It must be connected to an earth ground by a separate continuous lead. Connect the motor cable shield to this terminal on the drive (drive end) and the motor frame (motor end). Use a shield terminating or EMI clamp to connect shield to this terminal.

RFI Filter Grounding

An optional RFI filter can result in relatively high ground leakage currents. Therefore, the filter must only be used in installations with grounded AC supply systems and be permanently installed and solidly grounded (bonded) to the building power distribution ground. Be sure that the incoming supply neutral is solidly connected (bonded) to the same building power distribution ground. Do not use flexible cables for ground connections, and do not use any form of plug or socket that would permit inadvertent disconnection. Some local codes can require redundant ground connections. Periodically check the integrity of all connections. See the instructions that are supplied with the filter.

Power Cable Types Acceptable for 200…600 Volt Installations

For detailed information on various cable types that are acceptable for drive installations, see Wiring and Grounding Guidelines for Pulse-width Modulated (PWM) AC Drive, publication DRIVES-IN001.

ATTENTION: National Codes and standards (NEC, BSI, and so forth) and local codes outline provisions for safely installing electrical equipment. Installation must comply with specifications regarding wire types, conductor sizes, branch circuit protection, and disconnect devices. Failure to do so can result in personal injury and/or equipment damage.

Wire Recommendations

Type		Description	Min Insulation Rating
Power (1)(2)	Standard	• Four tinned copper conductors with XLPE insulation. • Copper braid/aluminum foil combination shield and tinned copper drain wire. • PVC jacket.	600V, 75 °C (167 °F)

(1) Separate control and signal wires from power wires by at least 0.3 meters (1 foot).
(2) The use of shielded wire for AC input power is not necessary, but is always recommended.

Motor Considerations

Due to the operational characteristics of AC variable frequency drives, motors with inverter grade insulation systems that are designed to meet or exceed NEMA MG1 Part 31.40.4.2 standards for resistance to spikes of 1600 volts are recommended.

Follow all guidelines when using non-inverter grade motors to avoid premature motor failures. See Wiring and Grounding Guidelines for Pulse-width Modulated (PWM) AC Drives, publication DRIVES-IN001, for recommendations.

Terminal Block Specifications

Table 11 - Wall Mount Frames 1…5 Power Terminal Block

Frame	Wire Size Range (1) (2)		Strip Length mm (in.)	Recommended Torque N•m (lb•in)	Recommended Tools
	Max mm^2 (AWG)	Min mm^2 (AWG)			
1	4.0 (10)	0.2 (24)	8.0 (0.31)	0.57 (5.0)	#2 Pozidriv, M3 x 7
2					
3	16.0 (6)	0.5 (20)	10.0 (0.39)	1.2 (10.6)	#2 flat screwdriver
4	25.0 (3)	2.5 (14)	10.0 (0.39)	2.7 (24.0)	#2 Pozidriv 492-C Phillips 0.25 in. flat screwdriver
5	35.0 (1)	10.0 (8)	12.0 (0.5)	4.0 (35.0)	#2 Pozidriv 492-C Phillips 0.25 in. flat screwdriver

(1) Maximum/minimum wire sizes that the terminal block can accept. These sizes are not recommendations.
(2) Terminal blocks are designed to accept one wire.

Table 12 - Wall Mount Frames 6 and 7 Power Terminal Block

Frame	Maximum Lug Width (1) mm (in.)	Recommended Torque N•m (lb•in)	Terminal Bolt Size	Recommended Tool
6	34.6 (1.36)	11.3 (100)	M8 x 1.25	13 mm hex socket
7	43.5 (1.71)			

(1) Customers supply the lugs.

Table 13 - Wall Mount Frames 1…7 PE Grounding Stud

Frame	Recommended Torque N•m (lb•in)	Terminal Bolt/Screw Size	Recommended Tool
1	1.36 (12)	M4	T20 hexalobular (Torx) #1 flat screwdriver
2	1.36 (12)	M4	7 mm hex deep socket
3	3.4 (30)	M6	10 mm hex deep socket
4			
5			
6	11.3 (100)	M8	13 mm hex socket
7			

Three-phase Terminal Locations

This section shows the locations of the power block and termination points.

Figure 95 - Wall Mount Frames 1…5 Power Terminal Block and Termination Point Locations

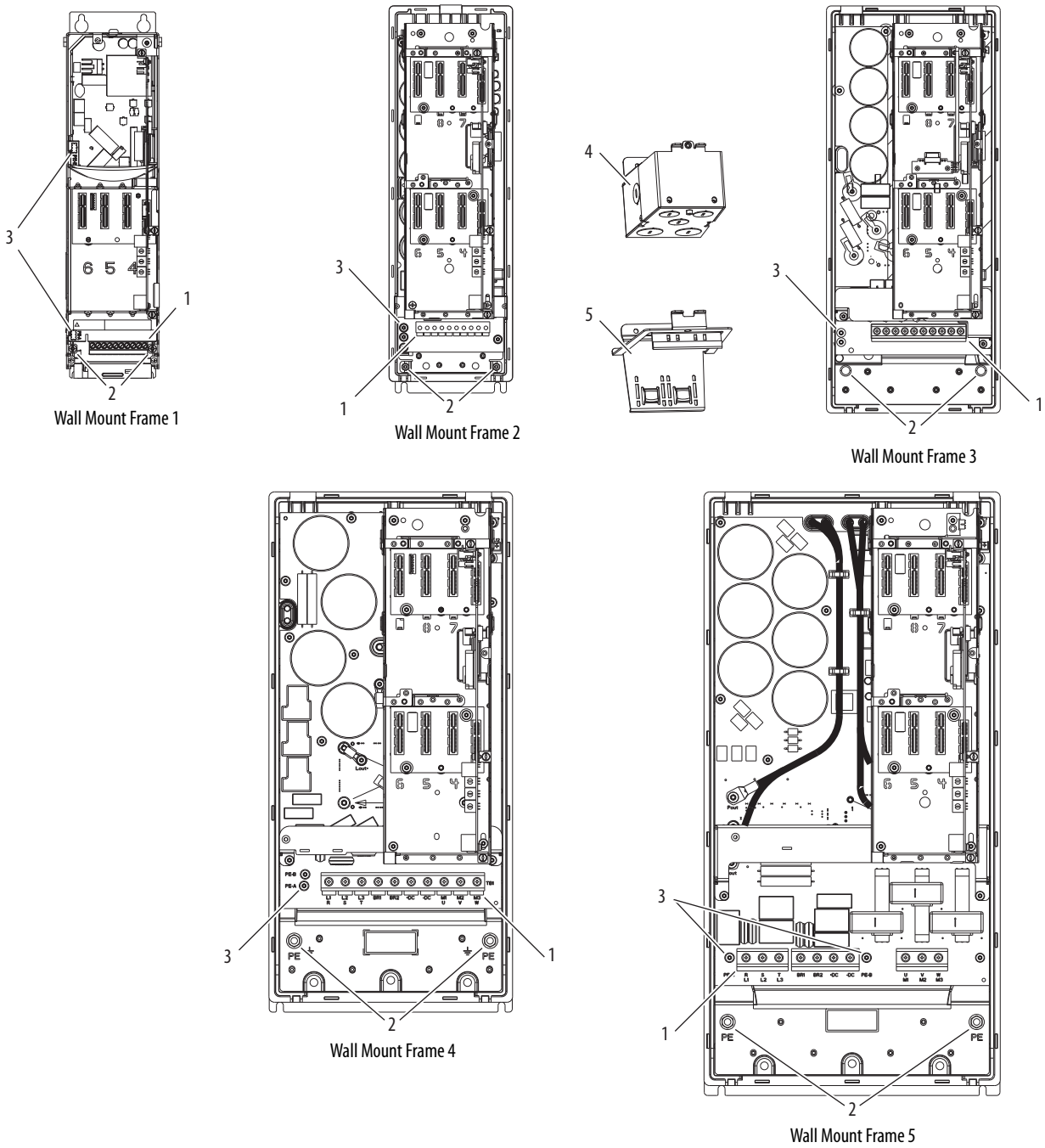

No.	Name	Description
1	Power terminal block	R/L1, S/L2, T/L3, BR1, BR2, +DC, -DC, U/T1, V/T2, W/T3
2	PE grounding studs	Terminating point to chassis ground for incoming AC line and motor shields. (1)
3	PE-A and PE-B	MOV and CMC jumpers
4	Optional NEMA/UL Type 1 conduit box	Terminating point to chassis ground for incoming AC line, motor shields, and control wire shields.
5	Optional EMC plate	Terminating point to chassis ground for incoming AC line, motor shields, and control wire shields.

(1) To meet conducted emission and UL requirements, land the incoming power ground on the left ground stud, and the motor ground on the right ground stud.

Table 14 - Wall Mount Frames 6 and 7 Power Terminal and Termination Point Locations

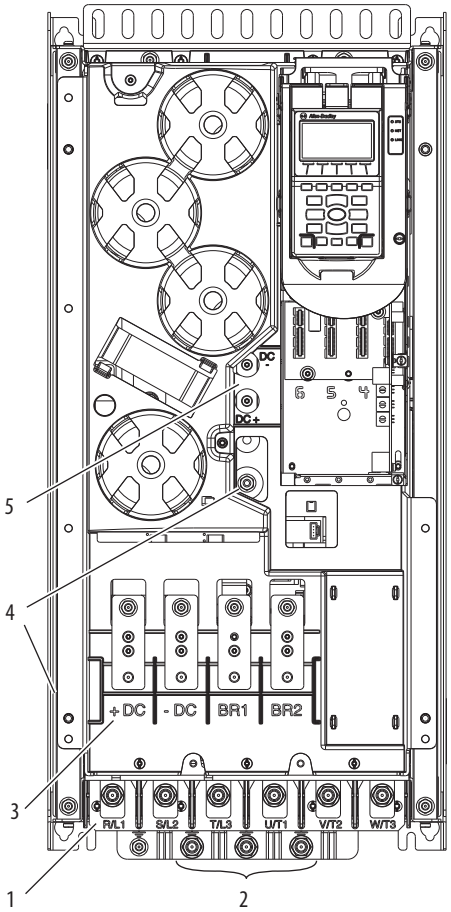

Wall Mount Frame 6

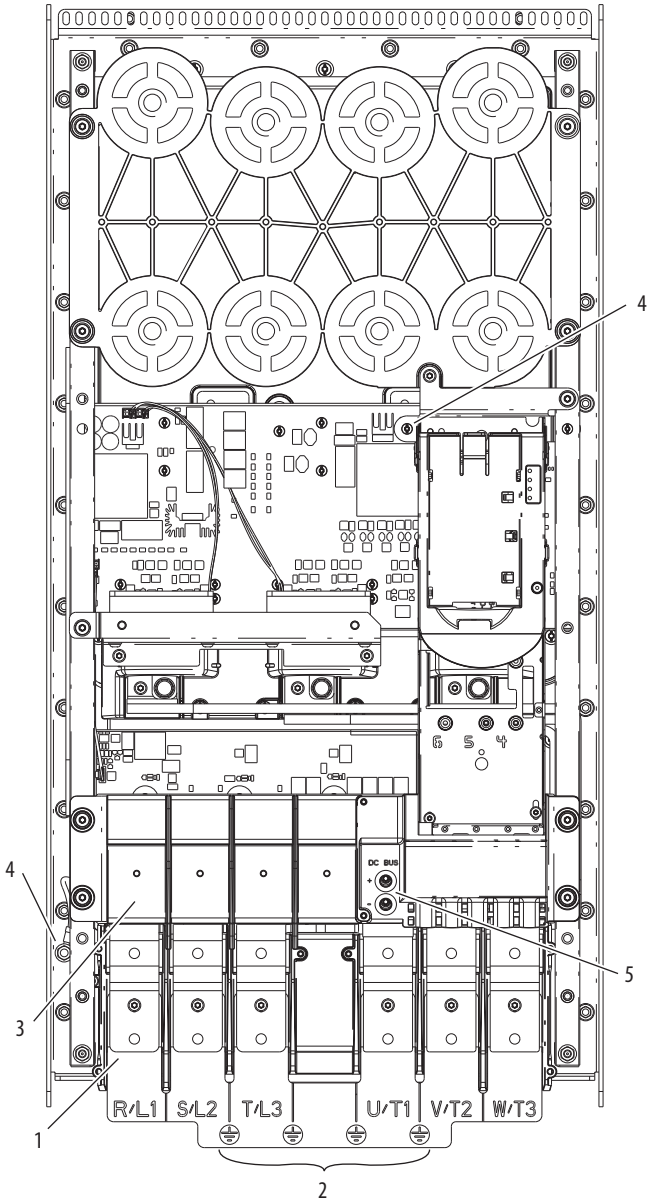

400/480V drives shown.

Wall Mount Frame 7

No.	Name	Description
1	Power terminals	R/L1, S/L2, T/L3, U/T1, V/T2, W/T3
2	PE grounding studs	Terminating point to chassis ground for incoming AC line and motor shield. (1)
3	DC Bus and brake terminals	+DC, -DC, BR1, BR2 (optional)
4	PE-A and PE-B	MOV and CMC jumpers
5	DC+ and DC-	Bus voltage test points

(1) To meet conducted emission and UL requirements, land the incoming power ground on the left side of the ground chassis, and the motor ground on the right side of the ground chassis.

Wall Mount Frames 1…7 AC Input Power Terminals

Frame	Power Terminal Blocks
1 2	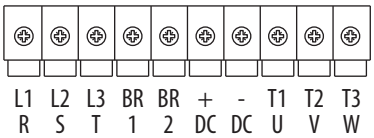
3	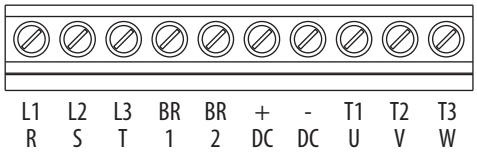
4	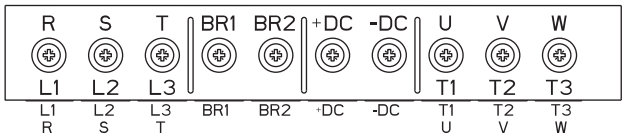
5	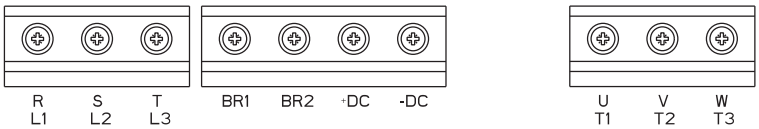
6 (1) (2)	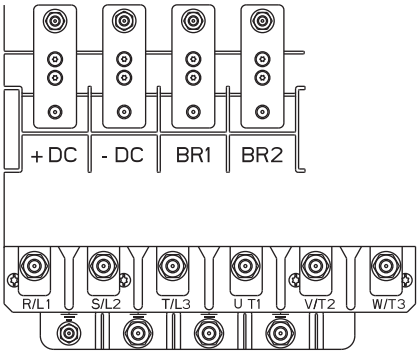 When nuts are fully seated on the Frame 6 power terminals, the stud does not extend beyond the top edge of the nut. Thread engagement is sufficient for a secure connection. 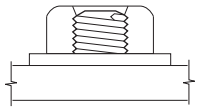
7 (1)	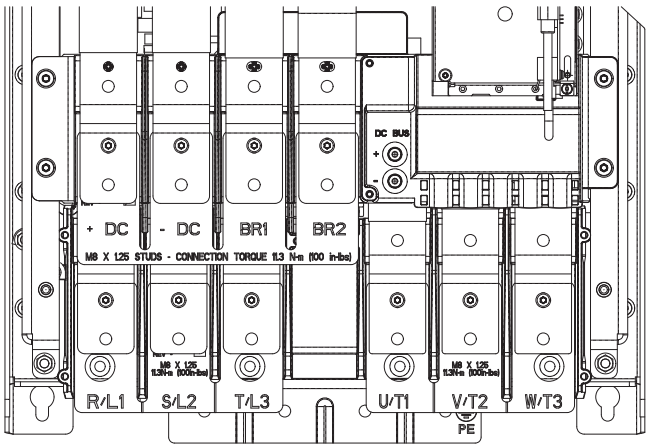

(1) DC Bus Terminals are optional on Frame 6 and 7 drives: catalog number position 5 or install kit number 20-750-DCBB1-F6 (Frame 6) or 20-750-DCBB1-F7 (Frame 7).
Dynamic Brake Resistor Terminals are optional on Frame 6 and 7 drives: catalog number position 12.
See Catalog Number Explanation on page 15.

(2) If the use of two conductors is desired, an AC Terminal Extension Kit (20-750-ACTE-F6) is available for Frame 6 drives.

Table 15 - Terminal Designations

Terminal	Description	Notes
+DC	DC bus (+)	DC input power or dynamic brake chopper
-DC	DC bus (–)	DC input power or dynamic brake chopper
BR1	DC brake (+)	Dynamic brake resistor connection (+)
BR2	DC brake (–)	Dynamic brake resistor connection (–)
U	U (T1)	Motor connections (1)
V	V (T2)	
W	W (T3)	
R	R (L1)	AC line input power
S	S (L2)	
T	T (L3)	
PE / ⏚	PE ground	Terminating point to chassis ground for incoming AC line and motor shield.

(1) **IMPORTANT:** Motors with NEMA MG1 Part 31.40.4.2 inverter grade insulation systems are recommended. If you intend to connect a motor that is not rated inverter grade, see Wiring and Grounding Guidelines for Pulse-width Modulated (PWM) AC Drives, publication DRIVES-IN001 for recommendations.

Wall Mount Frames 5…7 Common DC Input Terminal Locations

Figure 96 - Wall Mount Frame 5 Common DC Input Power Terminal and Termination Point Locations

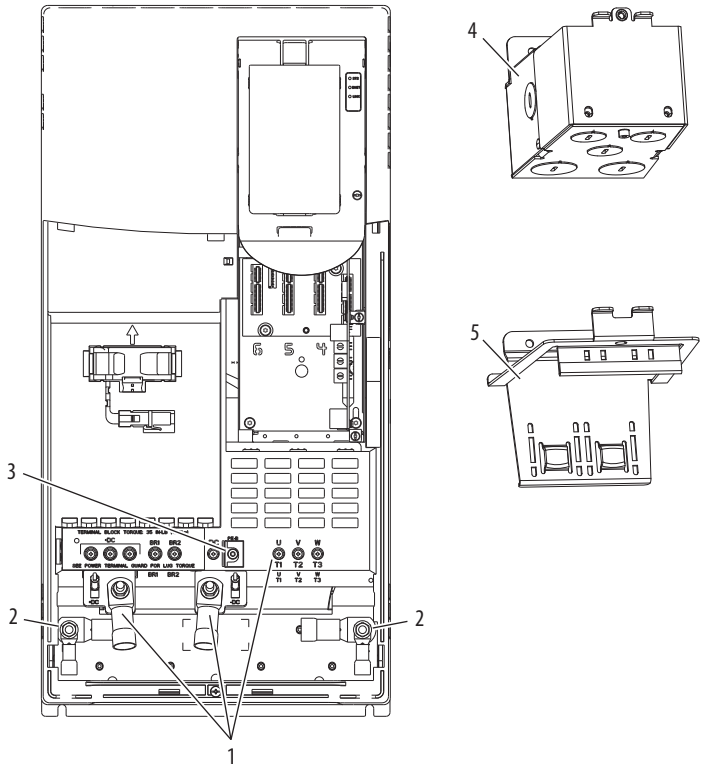

Wall Mount Frame 5

No.	Name	Description
1	Power terminal connections	+DC, -DC, U/T1, V/T2, W/T3
2	PE grounding studs	Terminating point to chassis ground for incoming DC line and motor shields.
3	PE-B	CMC jumper screw
4	Optional NEMA/UL Type 1 conduit box	Terminating point to chassis ground for incoming AC line, motor shields, and control wire shields.
5	Optional EMC plate	Terminating point to chassis ground for incoming AC line, motor shields, and control wire shields.

Figure 97 - Wall Mount Frames 6 and 7 Common DC Input Power Terminal and Termination Point Locations

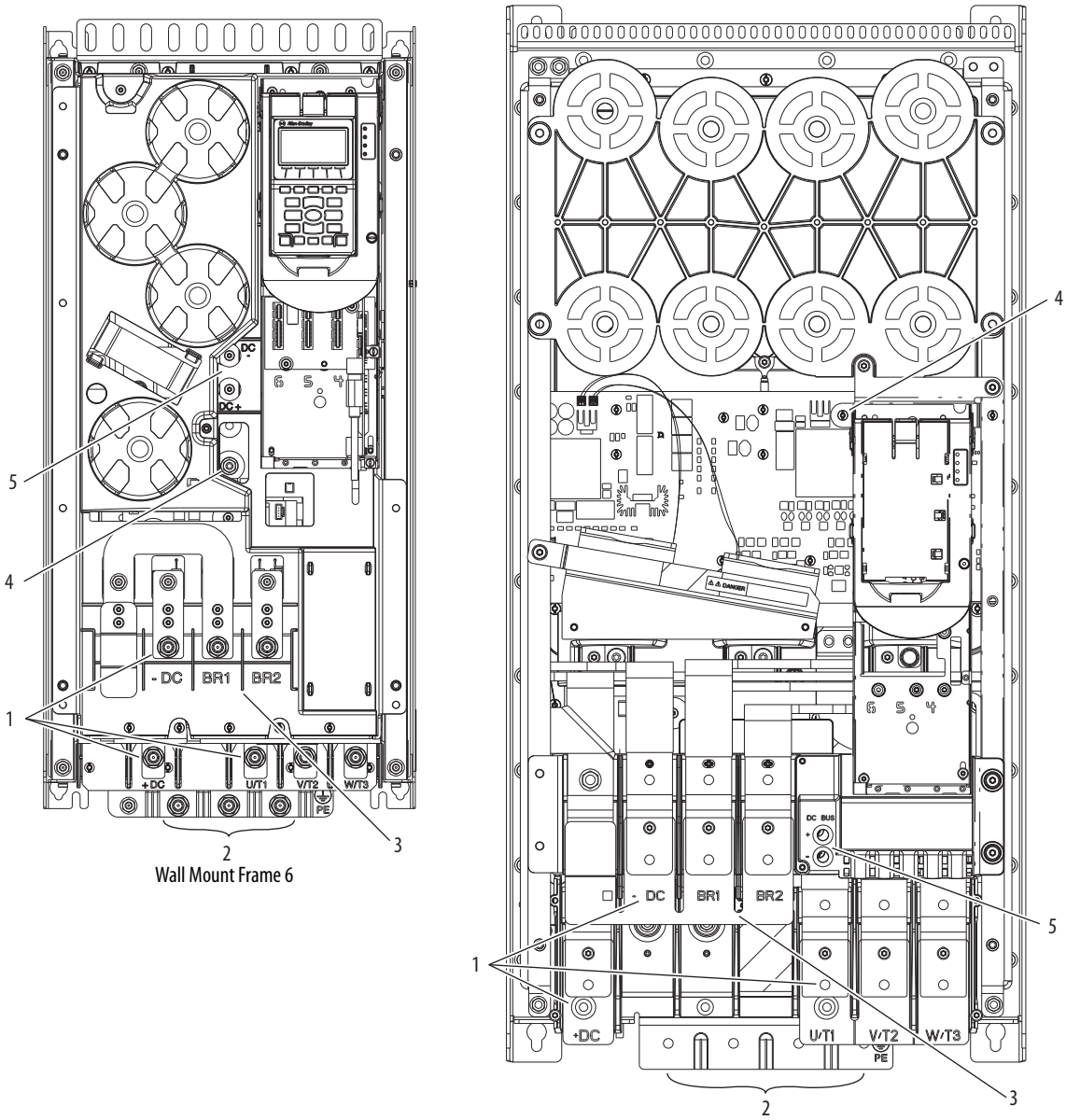

No.	Name	Description
1	Power terminals	+DC, -DC, U/T1, V/T2, W/T3
2	PE grounding studs	Terminating point to chassis ground for incoming DC line and motor shield.
3	DC Bus and brake terminals	+DC, -DC, BR1, BR2
4	PE-B	CMC jumper wire
5	DC+ and DC-	Bus voltage test points

Wall Mount Frames 5…7 Common DC Input Power Terminals

Frame	Power Terminal Blocks
5	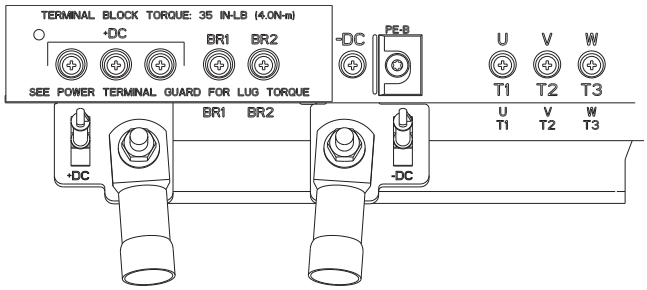
6 (1)	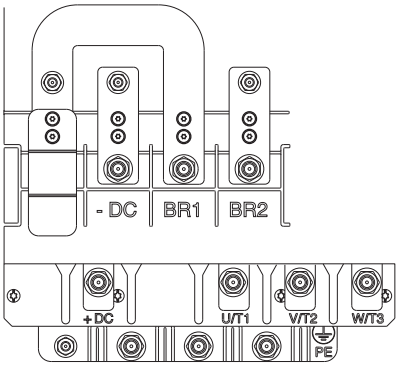
7 (1)	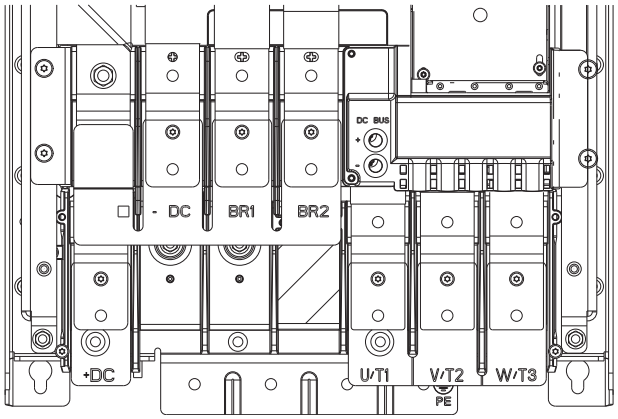

(1) Dynamic Brake Resistor Terminals are optional on Frame 6 and 7 drives: catalog number position 12. See Catalog Number Explanation on page 15.

Table 16 - Common DC Input Terminal Designations

Terminal	Description	Notes
+DC	DC bus (+)	DC input power
-DC	DC bus (–)	DC input power
BR1	DC brake (+)	Dynamic brake resistor connection (+)
BR2	DC brake (–)	Dynamic brake resistor connection (–)
U	U (T1)	Motor connections (1)
V	V (T2)	
W	W (T3)	
PE / ⏚	PE ground	Terminating point to chassis ground for incoming DC line and motor shield.

(1) **IMPORTANT:** Motors with NEMA MG1 Part 31.40.4.2 inverter grade insulation systems are recommended. If you intend to connect a motor that is not rated inverter grade, see Wiring and Grounding Guidelines for Pulse-width Modulated (PWM) AC Drives, publication DRIVES-IN001 for recommendations.

Floor Mount Frames 8…10 Bus Bar Locations

Figure 98 - Bus Bar Locations, AC Input Drives

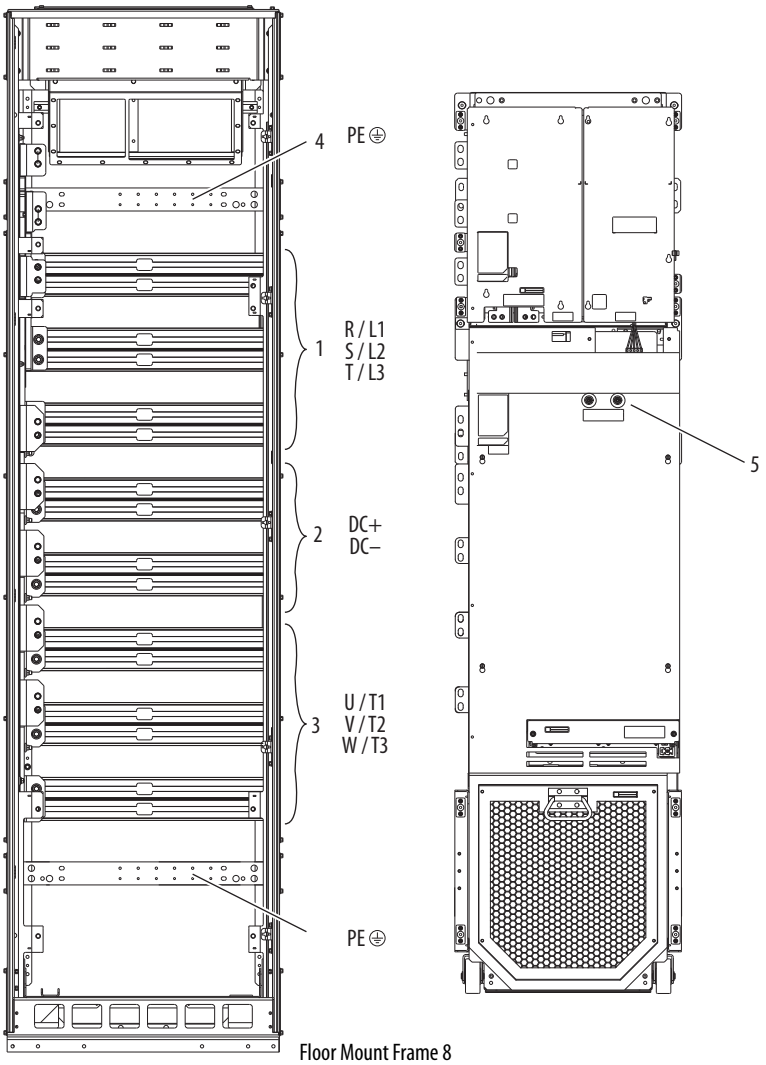

No.	Name	Description
1	Power bus	R/L1, S/L2, T/L3 (drive only.)
2	DC bus	DC+, DC- (The DC bus is included with frame 9 and 10 drives. Frame 8 drives require the field installed kit 20-750-BUS1A-F8.)
3	Power bus	U/T1, V/T2, W/T3 (drive only or cabinet options bay without power output options.)
4	PE grounding bar	Terminating point to chassis ground for incoming AC line and motor shield.
5	DC+ and DC-	Bus voltage test points

Figure 99 - Bus Bar and AC Power Rail Locations, Common DC Input Floor Mount Drives

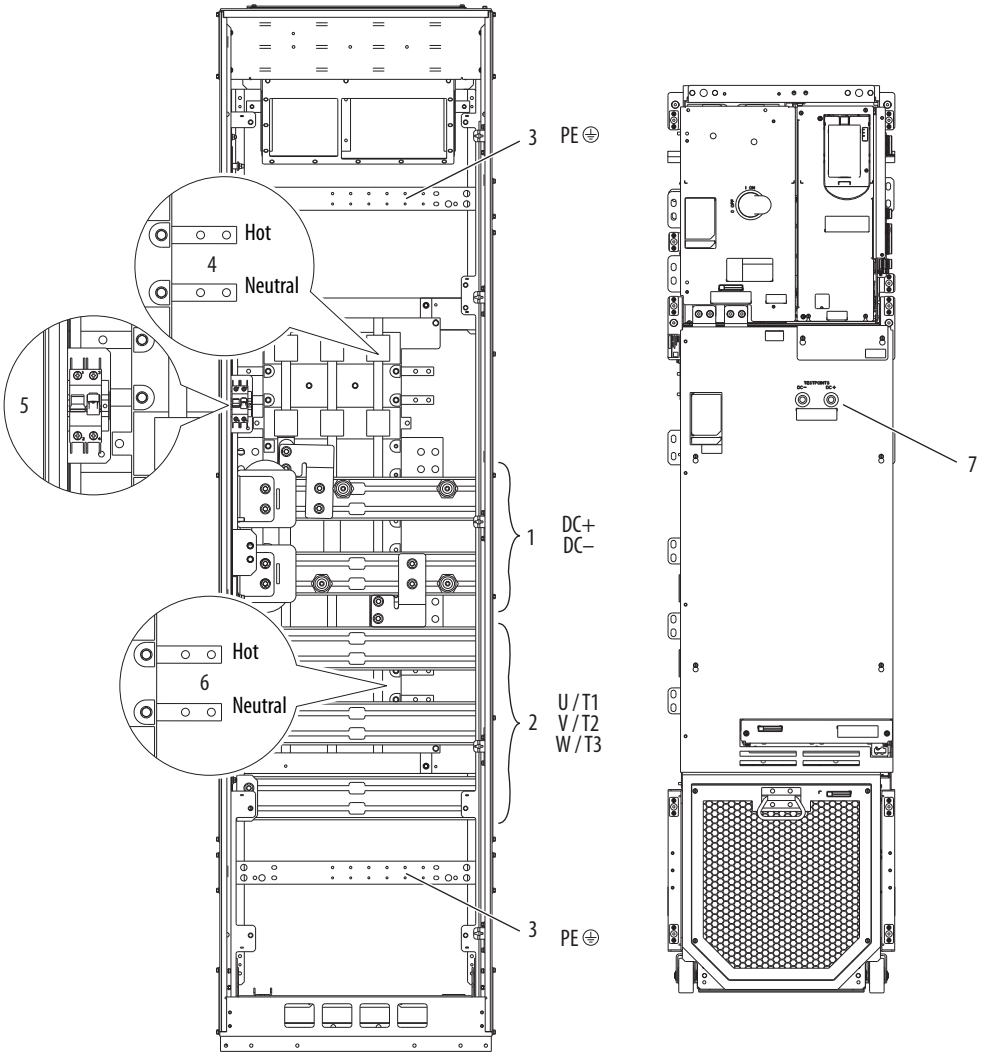

Frame 8

Table 17 - Floor Mount Frame 8 Common DC Input

No.	Name	Description
1	DC power bus	DC+, DC-
2	Power bus	U/T1, V/T2, W/T3
3	PE grounding bar	Terminating point to chassis ground for incoming AC line and motor shield.
4	Control rail	120V AC control power supply connections. Top rail is hot.
5	Control power circuit breaker	120V AC control power supply circuit breaker.
6	UPS rail	120V AC uninterruptible power supply (UPS) connections. Top rail is hot. The UPS rail is only installed when the P30 UPS control bus option is selected.
7	DC+ and DC-	Bus voltage test points

Figure 100 - Bus Bar Locations, Floor Mount Frame 8 Option P14 Wiring Bay

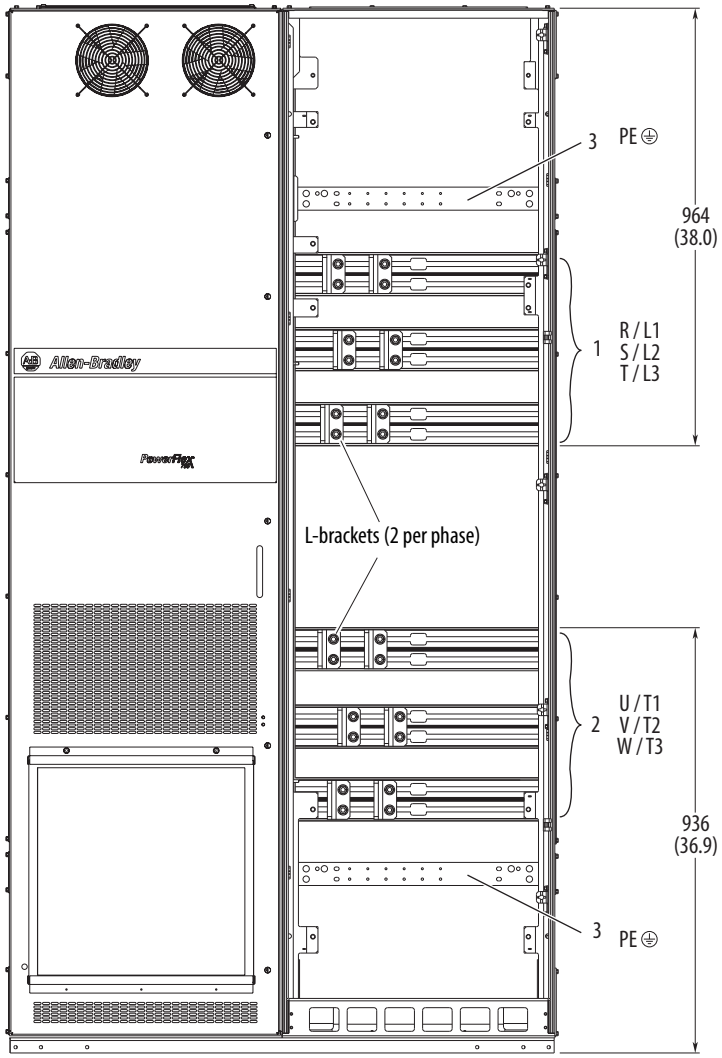

Table 18 - Floor Mount Frame 8 Wiring Bay

No.	Name	Description
1	Power bus	R/L1, S/L2, T/L3
2	Power bus	U/T1, V/T2, W/T3
3	PE grounding bar	Terminating point to chassis ground for incoming AC line and motor shield.

See Floor Mount Frames 8...10 Power Terminal L-brackets on page 170 for information on how to make cable connections on extruded bus bars.

Floor Mount Cabinet Options Bay

Figure 101 - Bus Bar Locations, Floor Mount Frame 9 Cabinet Options Bay (Cabinet Options Assembly Removed)

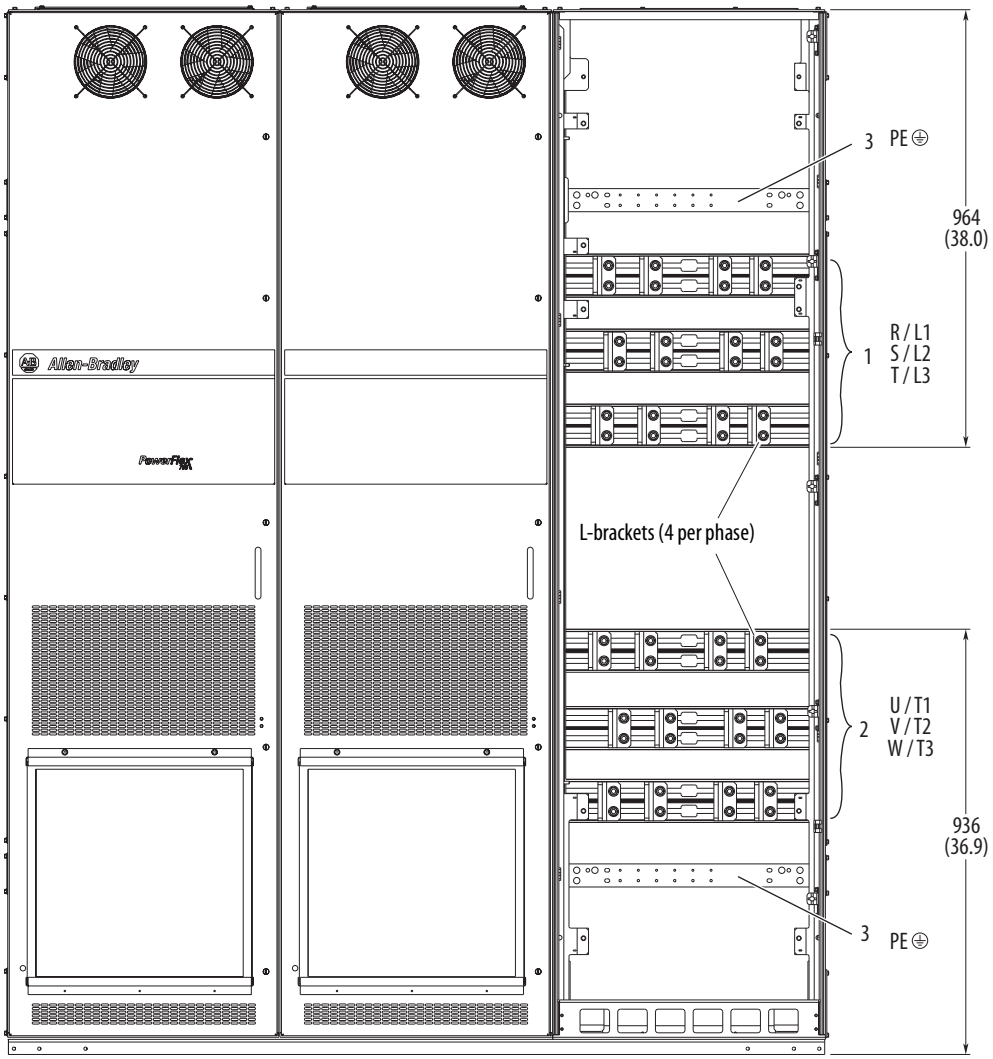

Table 19 - Floor Mount Frame 9 Cabinet Options Bay Bus Bars

No.	Name	Description
1	Power bus	R/L1, S/L2, T/L3
2	Power bus	U/T1, V/T2, W/T3
3	PE grounding bar	Terminating point to chassis ground for incoming AC line and motor shield.

See Floor Mount Frames 8...10 Power Terminal L-brackets on page 170 for information on how to make cable connections on extruded bus bars.

Figure 102 - Option P3 or P5 Disconnect Switch Wiring Clearance

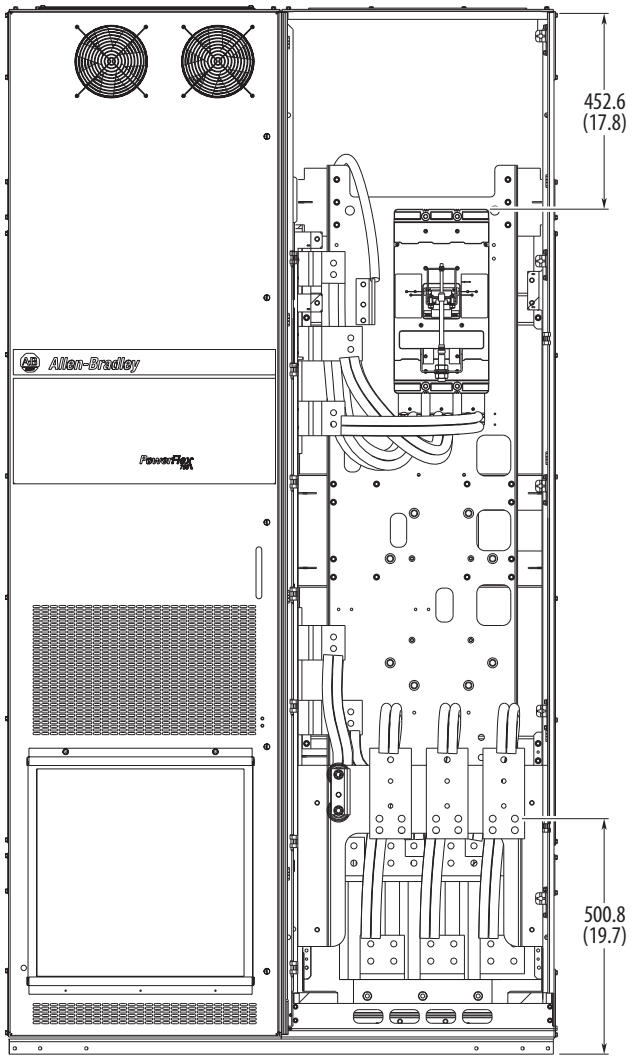

Floor Mount Frames 8…10 Power Wiring Options

The following table describes the cabling options available for each Floor Mount Frames 8...10 drive enclosure. See pages 76...120 for conduit plate dimensions.

	0	X
Adequate Spacing Available conduit plates provide adequate spacing for typical cabling.	**Possible – Evaluation is Required** Available conduit plates must be evaluated to determine if cabling fits.	**Not Possible – Insufficient Spacing** Conduit plates are not available for the specified configuration.

Frame	Enclosure Rating	Enclosure Code	Cabinet Layout	Top Entry/ Top Exit	Top Entry/ Bottom Exit	Bottom Entry/ Top Exit	Bottom Entry/ Bottom Exit
8	IP20, NEMA/UL Type 1	B	600 mm (23.6 in.) drive cabinet	X		X	0
		L, P, W	800 mm (31.5 in.) drive cabinet	0		0	
		B	600 mm (23.6 in.) drive with cabinet options bay			X	0
		L, P, W	800 mm (31.5 in.) drive with cabinet options bay			0	
		B	600 mm (23.6 in.) drive with wiring bay				
		L, P, W	800 mm (31.5 in.) drive with wiring bay				
		B	600 mm (23.6 in.) drive with cabinet options and wiring bays				
		L, P, W	800 mm (31.5 in.) drive with cabinet options bay and wiring bays				
	IP54, NEMA Type 12	J, K, Y	800 mm (31.5 in.) drive cabinet	X	X	X	
		J, K, Y	800 mm (31.5 in.) drive with cabinet options bay	X		0	0
		J, K, Y	800 mm (31.5 in.) drive with wiring bay				
		J, K, Y	800 mm (31.5 in.) drive with cabinet options bay and wiring bays				
9	IP20, NEMA/UL Type 1	B	600 mm (23.6 in.) drive cabinet	0		0	0
		L, P, W	800 mm (31.5 in.) drive cabinet				
		B	600 mm (23.6 in.) drive with cabinet options bay			X	
		L, P, W	800 mm (31.5 in.) drive with cabinet options bay				
		B	600 mm (23.6 in.) drive with wiring bay				
		L, P, W	800 mm (31.5 in.) drive with wiring bay				
		B	600 mm (23.6 in.) drive with cabinet options and wiring bays				
		L, P, W	800 mm (31.5 in.) drive with cabinet options bay and wiring bays				
	IP54, NEMA Type 12	J, K, Y	800 mm (31.5 in.) drive cabinet	X	X	X	
		J, K, Y	800 mm (31.5 in.) drive with cabinet options bay	0		0	
		J, K, Y	800 mm (31.5 in.) drive with wiring bay				
		J, K, Y	800 mm (31.5 in.) drive with cabinet options bay and wiring bays				
10	IP20, NEMA/UL Type 1	B	600 mm (23.6 in.) drive cabinet	0		0	0
		L, P, W	800 mm (31.5 in.) drive cabinet			0	
	IP54, NEMA Type 12	J, K, Y	800 mm (31.5 in.) drive cabinet	X	X	X	

Floor Mount Frames 8…10 Power Terminal L-brackets

Frame 8 drives and larger uses movable L-bracket assemblies to connect AC line input power, output to motor, and DC power to the extruded bus bars at the back of the cabinet. Wiring must be connected to the L-brackets with customer-supplied lugs (either crimp or mechanical type) and customer-supplied hardware. See Figure 104.

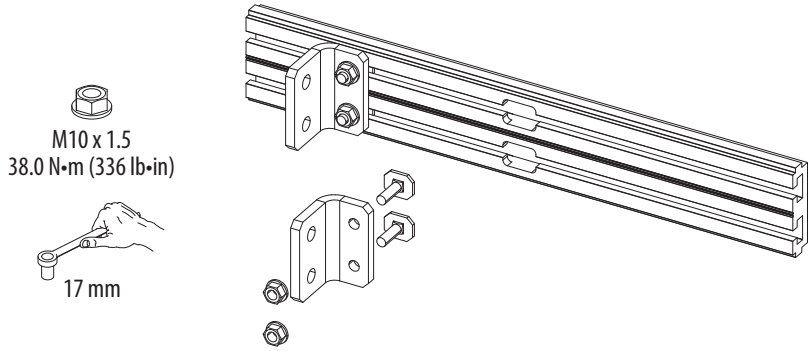

IMPORTANT

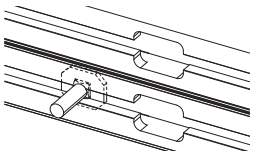

Verify that clamp fits squarely in the bus bar channel

Additional Power Terminal L-Brackets

Frame 8 and larger drives come equipped with two L-brackets per AC phase. If an application requires additional L-brackets, kit number 20-750-LBRKT1 is available. Each kit contains three L-brackets and mounting hardware.

Figure 103 - L-Bracket Approximate Dimensions

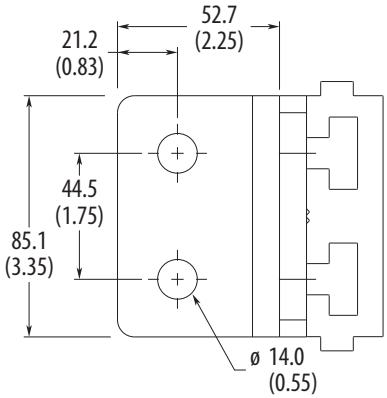

Crimp terminals can be applied to cabling with the vendor-recommended tooling. Torque mechanical terminals per vendor instructions. When using mechanical terminals, which can be large, be sure to maintain adequate spacing to adjacent wires, terminals, and other parts.

Figure 104 - Standard Barrel Lugs: Approximate Maximum Dimensions

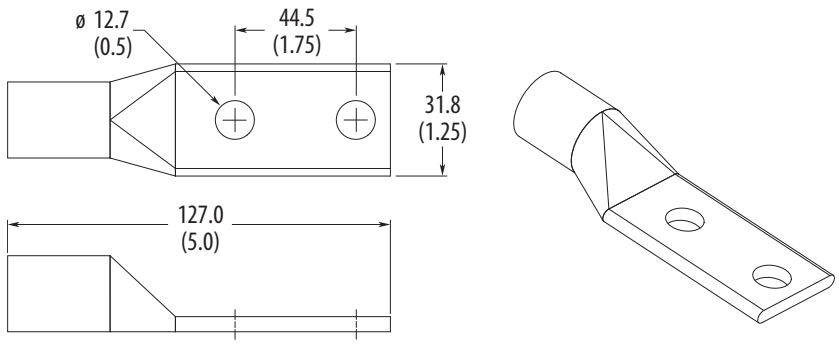

Wires with appropriate terminals can be bolted to both sides of the L-brackets if necessary. Frame 8 drives include two L-brackets per phase, up to four conductors per phase. Terminals can be attached to the L-brackets using M12 or 0.5 in. diameter bolts, nuts, and washers. Bellville spring washers, or equivalent, are recommended.

Figure 105 - Typical Lug Connection Options

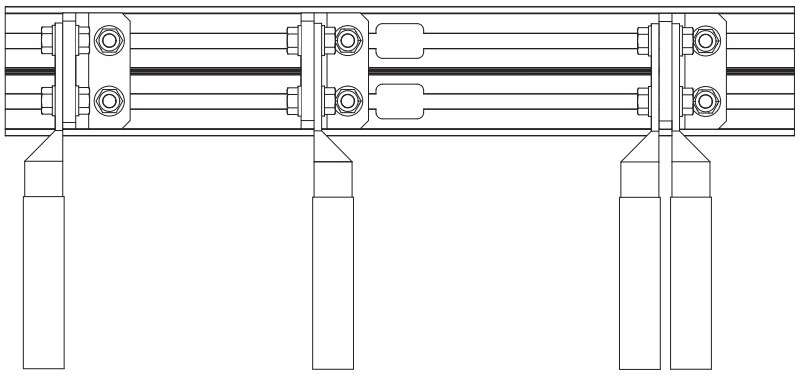

Left side of L-bracket. Right side of L-bracket. Both sides of L-bracket.

Recommended Motor Cable Spacing – Floor Mount Frames 8 and Larger

Frame 8 and larger drives typically require multiple conductors in parallel. The installer determines the wire size, and number of conductors, based on drive rated current, local codes, operating conditions, and specific application needs. When using multiple conductors per phase, symmetrical spacing of the input and output power cabling over the span of the bus bar for each phase is recommended.

When using multiple conductors per phase, wires must be arranged so that each conduit, bundle, or cable contains equal numbers of conductors from all three phases.

Figure 106 - Recommended Cable Spacing Example – Floor Mount Frame 9 without Cabinet Options Bay

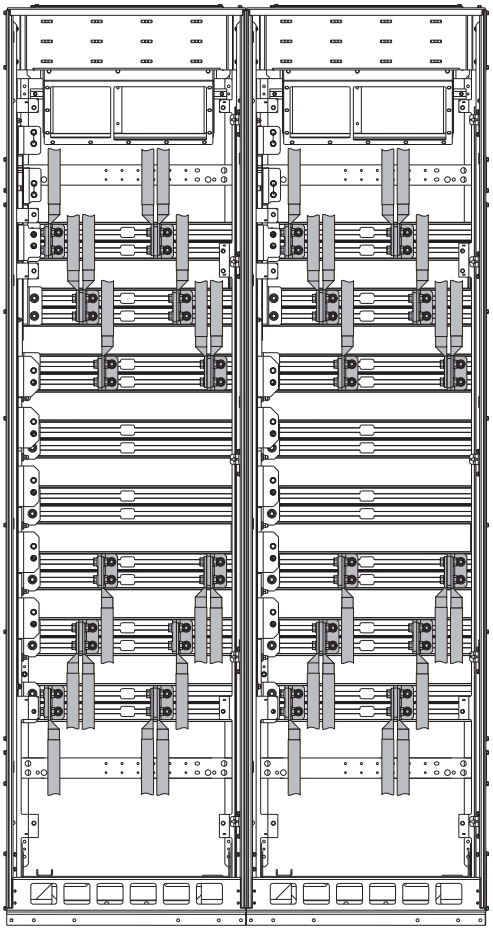

Figure 107 - Top and Bottom Entry Power Connection Example

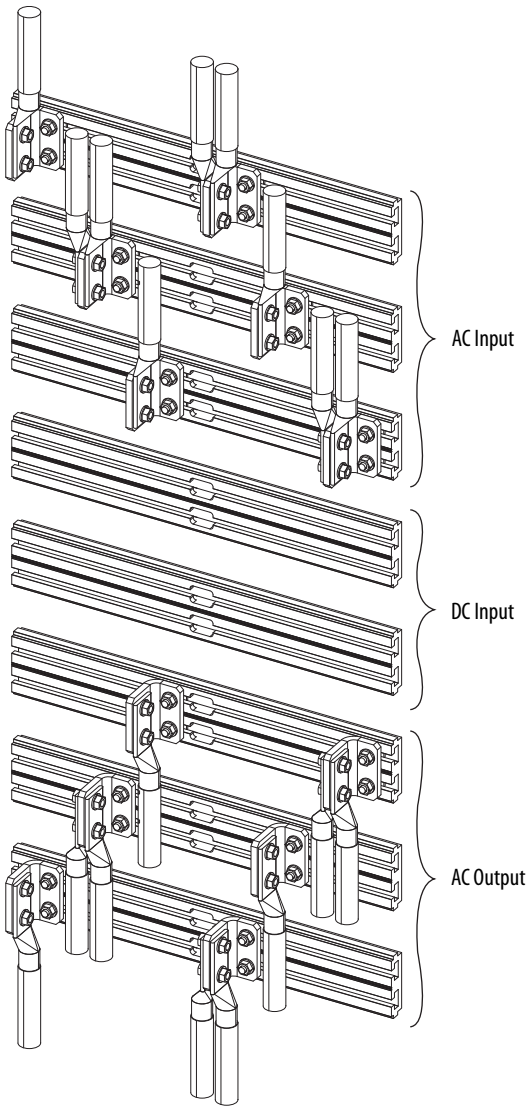

IMPORTANT Verify that all lug fasteners and L-brackets are properly torqued to 38.0 N•m (336 lb•in). Torque down or remove any unused L-brackets.

Figure 108 - Floor Mount Drives Cabinet Clearances

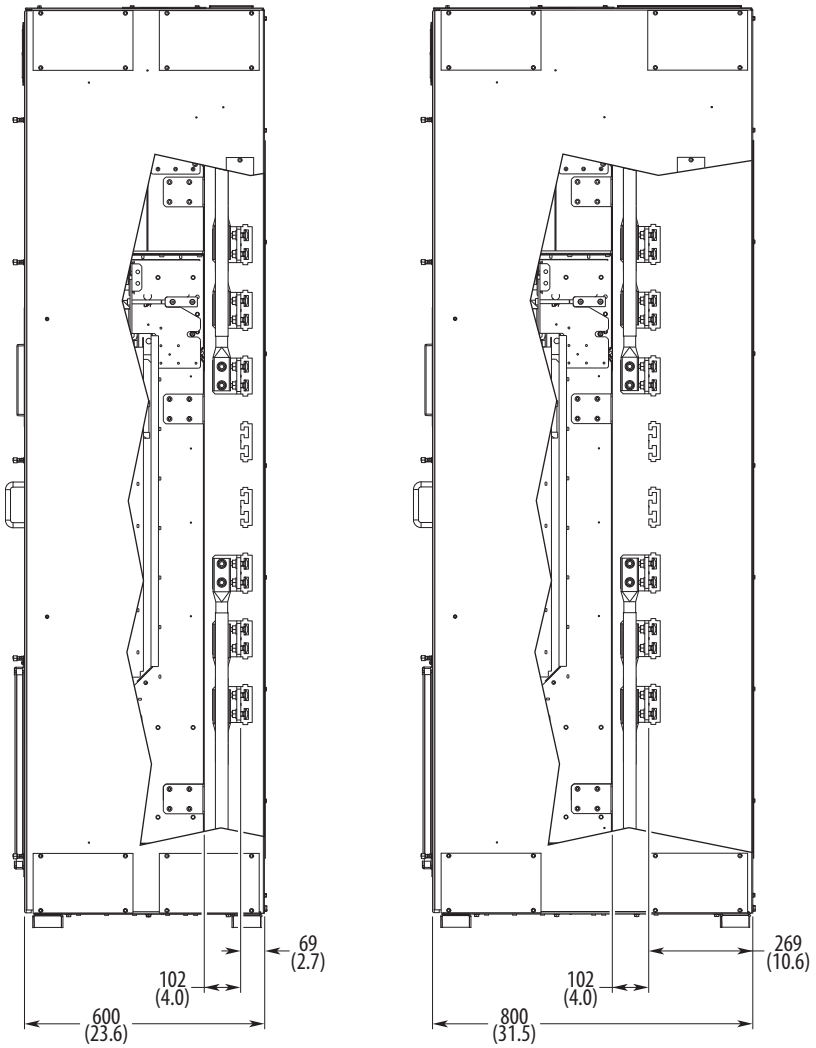

Dimensions are in millimeters and (inches).

Fuse and Circuit Breaker Ratings

The tables on the following pages provide recommended AC line input fuse and circuit breaker information. See Fusing on page 176 and Circuit Breakers on page 176 for UL and IEC requirements. Sizes are recommended based on 40 °C (104 °F) and the U.S. NEC. Other country, state, or local codes can require different ratings. DC link fuse recommendations for DC input drives are also provided. In addition, Frame 8 and larger drives include AC line fuses (with blown fuse indicators) to provide drive short circuit protection.

Table 20 - Input Device Requirements

Frames	Enclosure Catalog Code	Enclosure Type	Installation Type	UL Certification Required	UL Certification Not Required
1	R	IP20 NEMA/UL Open Type	Installed in a non-ventilated cabinet.	All devices that are listed on pages177, 179, 181, and 185 are acceptable.	All devices that are listed on pages 177…195 are acceptable.
			Installed outside of cabinet by using NEMA Type 1 kit or in a ventilated cabinet.	Only non-time delay fuses that arelisted on pages177, 179, 181, and 185, excluding maximum value, are acceptable.	
2…5	N	IP20 NEMA/UL Open Type	Installed in a non-ventilated cabinet. Heat sink is inside or outside of cabinet.	All devices that are listed on pages177, 179, 181, 185, and 189 are acceptable.	
	F	Flange			
	N	IP20 NEMA/UL Open Type	Installed outside of cabinet by using NEMA Type 1 kit or in a ventilated cabinet.	208V AC/280V DC or 240V AC/325V DC drives: Only non-time delay fuses listed on pages 177 and 179, excluding maximum value, are acceptable. 400V AC/540V DC or 480V AC/650V DC drives: Only non-time delay fuses that are listed on pages 181 and 185, excluding maximum value, are acceptable. 600V AC/810V DC drives: Only non-time delay fuses that are listed on page 189 are acceptable, with maximum value of 40 A (Frame 3), 60 A (Frame 4) and 100 A (Frame 5).	
	F	Flange			
	G	IP54 NEMA/UL Type 12	Installed inside or outside of any cabinet.	All devices that are listed on pages177, 179, 181, 185, and 189 are acceptable.	
6 and 7	N	IP00 NEMA/UL Open Type	Installed in any cabinet. Heat sink is inside or outside of cabinet.	208V AC/280V DC or 240V AC/325V DC drives: All devices listed on pages 177 and 179 are acceptable. 400V AC/540V DC or 480V AC/650V DC drives: All devices that are listed on pages 181 and 185 are acceptable. 600V AC/810V DC or 690V AC/932V DC drives: Only time delay and non-time delay fuses that are listed on pages 189, 190, and 193 are acceptable.	
			Installed outside of cabinet by using NEMA Type 1 kit.		
	G	IP54 NEMA/UL Type 12	Installed inside or outside of any cabinet.	All devices that are listed on pages 181, 185, 189, 190, and 193 are acceptable.	
8…10	B, L, P, W	IP20 NEMA/UL Type 1	Installed inside of any cabinet.	All devices that are listed on pages 183, 184, 187, 188, 191, 192, 194, and 195 are acceptable.	
	J, K, Y	IP54 NEMA 12	Installed inside of any cabinet.	All devices that are listed on pages 183, 184, 187, 188, 191, 192, 194, and 195 are acceptable.	

Fusing

The recommended fuse types are listed in this section. If available current ratings do not match the fuse type listed in the tables, choose the next higher fuse rating.

- IEC – BS88 (British Standard) Parts 1 & 2, EN 60269-1, Parts 1 & 2 [(1)], type gG or equivalent should be used.
- UL – UL Class CC, T, RK1, J, or L should be used.

Circuit Breakers

The 'non-fuse' listings in the following tables include inverse time circuit breakers, instantaneous trip circuit breakers (motor circuit protectors), and 140M/MT Motor Protection Circuit Breakers (MPCBs) that are used as self-protected combination motor controllers. If one of these options is chosen as the desired protection method, the following requirements apply:

- IEC – Both types of circuit breakers and 140M/MT self-protected combination motor controllers are acceptable for IEC installations.
- UL – Only inverse time circuit breakers and the specified 140M/MT self-protected combination motor controllers are acceptable for UL installations.
- Drives without a 140M/MT recommendation have not been tested in combination with the drive.

Bulletin 140G circuit breakers, which are used in frame 8 and larger drives, are set by the factory for the duty rating of the drive. The default switch settings for each drive rating are listed in the PowerFlex® 750-Series AC Drives Frames 8 and Larger Hardware Service Manual, Appendix C, publication 750-TG001.

(1) Typical designations include, but are not be limited to the following; Parts 1 & 2: AC, AD, BC, BD, CD, DD, ED, EFS, EF, FF, FG, GF, GG, and GH.

Table 21 - 208V AC and 281V DC Input Protection Devices – Wall Mount Frames 1…7

Applied Rating (1)	Frame (2)	Cont. Output [A]	Drive Sized for Normal Duty			Drive Sized for Heavy Duty			Input Quantities		AC Input Protection Devices									Input Quantities	DC Input Protection (14)
			Cat. No.	Output Overload [A]		Cat. No.	Output Overload [A]		Continuous AC Input		Dual Element Time Delay Fuse [A]		Non-time Delay Fuse [A]		Circuit Breaker MaxSize (6)	Circuit Breaker, Dual Element Time Delay Fuse	Motor Circuit Protector (8)	140M/MT Type E Combination Motor Controller with Adjustable Current Range (9) (10)		Continuous DC Input	Non-time Delay Fuse
			(x = F or G)	60 s	3 s	(x = F or G)	60 s	3 s	kVA	A	Min (4)	Max (5)	Min (4)	Max (5)		Min Enclosure Volume (in.^{3}) (7)		Cat. No.	Min Enclosure Volume (in.^{3}) (13)	A	
208V AC Input																				**281V DC Input**	
0.37 kW	1	2.5	20x…B2P2	2.75	3.75	20x…B4P2	5.28	7.2	0.73	2.0	3	6	3	10	15	3840	3	140M-xxx-B25 140MT-xxx-B25 (11)	7269	2.4	JKS-6
0.75 kW	1	4.8	20x…B4P2	5.28	7.2	20x…B6P8	8.58	11.7	1.4	3.9	6	10	6	15	20	3840	7	140M-xxx-B63 140MT-xxx-B63 (11)	7269	4.5	JKS-10
1.5 kW	1	7.8	20x…B6P8	8.58	11.7	20x…B9P6	12.1	16.5	2.5	7.0	10	15	10	25	30	3840	15	140M-xxx-C10 140MT-xxx-C10 (11)	7269	8.2	HSJ-15
2.2 kW	1	11	20x…B9P6	12.1	16.5	20x…B015	16.83	22.95	3.6	9.9	15	20	15	35	40	3840	15	140M-xxx-C16 140MT-xxx-C16 (11)	7269	11.6	HSJ-20
4 kW	1	15.3	20x…B015	16.83	22.95	20x…B022(3)	24.2	33	5.2	14.3	20	30	20	50	60	3840	20	140M-xxx-C20 140MT-xxx-C20 (11)	7269	16.7	HSJ-30
0.37 kW	2	2.5	20x…B2P2	3.75	4.5	20x…B2P2	3.75	4.5	0.7	2.0	3	6	3	10	15	3840	3	140M-xxx-B25 140MT-xxx-B25 (11)	9086	2.4	JKS-6
0.75 kW	2	4.8	20x…B4P2	7.2	8.64	20x…B4P2	7.2	8.64	1.4	3.9	6	10	6	15	20	3840	7	140M-xxx-B63 140MT-xxx-B63 (11)	9086	4.5	JKS-10
1.5 kW	2	7.8	20x…B6P8	11.7	14.04	20x…B6P8	11.7	14.04	2.5	7.0	10	15	10	25	30	3840	15	140M-xxx-C10 140MT-xxx-C10 (11)	9086	8.2	HSJ-15
2.2 kW	2	11	20x…B9P6	16.5	19.8	20x…B9P6	16.5	19.8	3.6	9.9	15	20	15	35	40	3840	15	140M-xxx-C16 140MT-xxx-C16 (11)	9086	11.6	HSJ-20
4 kW	2	17.5	20x…B015	19.25	26.25	20x…B022	24.2	33	5.9	16.4	20	35	20	60	70	3840	20	140M-xxx-C20 140MT-xxx-C20(11)	9086	19.1	HSJ-30
5.5 kW	2	22	20x…B022	24.2	33	20x…B028(3)	35.42	48.3	7.5	20.8	30	45	30	70	80	3840	30	140M-xxx-C25 140MT-xxx-C25 (12)	9086	24.3	HSJ-45
7.5 kW	3	32.2	20x…B028	35.42	48.3	20x…B042	48.3	64.5	11.1	30.8	40	60	40	100	125	4800	50	140M-F8E-C32	9086	36.0	HSJ-60
11 kW	3	43	20x…B042	47.3	64.5	20x…B054(3)	64.5	90	14.8	41.2	60	80	60	150	150	4800	60	140M-F8E-C45	9086	48.1	HSJ-90
15 kW	4	60	20x…B054	66	90	20x…B070(3)	90	117.3	20.7	57.4	80	125	80	200	225	4800	100			67.1	HSJ-100
18.5 kW	5	78.2	20x…B070	86.02	117.3	20x…B080	117.3	140.8	27.0	74.9	90	150	90	250	300	7200	100			87.5	HSJ-150
22 kW	5	92	20x…B080	101.2	138	20x…B104(3)	138	180	31.7	88.1	110	175	110	300	350	7200	150			102.9	HSJ-200
30 kW	6	120	20x…B104	132	180	20x…B130	180	225	42.4	117.6	150	250	150	400	350		150			137.4	HSJ-225
37 kW	6	150	20x…B130	165	225	20x…B154	225	270	52.9	147.0	200	300	200	500	450		250			171.7	HSJ-300
45 kW	6	177	20x…B154	194.7	265.5	20x…B192	265.5	331.5	62.5	173.4	225	350	225	600	500		250			202.6	HSJ-350
55 kW	6	221	20x…B192	243.1	331.5	20x…B260	331.5	390	78.0	216.5	300	400	300	650	600		400			253.0	HSJ-400
66 kW	6	260	20x…B260	286	390	20x…B312(3)	394.9	538.5	91.87	254.7	350	500	350	750	700		400			297.7	HSJ-400

Table 21 - 208V AC and 281V DC Input Protection Devices – Wall Mount Frames 1…7 (Continued)

Applied Rating (1)	Frame (2)	Cont. Output [A]	Drive Sized for Normal Duty			Drive Sized for Heavy Duty			Input Quantities		AC Input Protection Devices									Input Quantities	DC Input Protection (14)
			Cat. No.	Output Overload [A]		Cat. No.	Output Overload [A]		Continuous AC Input		Dual Element Time Delay Fuse [A]		Non-time Delay Fuse [A]		Circuit Breaker MaxSize (6)	Circuit Breaker, Dual Element Time Delay Fuse	Motor Circuit Protector (8)	140M/MT Type E Combination Motor Controller with Adjustable Current Range (9) (10)		Continuous DC Input	Non-time Delay Fuse
			(x = F or G)	60 s	3 s	(x = F or G)	60 s	3 s	kVA	A	Min (4)	Max (5)	Min (4)	Max (5)		Min Enclosure Volume (in.^{3}) (7)		Cat. No.	Min Enclosure Volume (in.^{3}) (13)	A	
90 kW	7	359	20x…B312	394.9	538.5	20x…B360	538.5	646.2	126.7	351.7	500	700	500	1000	1000		600			411.0	Bussman 470MM612
110 kW	7	414	20x…B360	455.4	621				146.1	405.6	600	800	600	1200	1200		600			474.0	Bussman 470MM613
132 kW	7	477	20x…B477	524.7	715.5				168.4	467.3	600	900	600	1400	1200		600			546.1	Bussman 470MM613

(1) 'Applied Rating' refers to the motor that will be connected to the drive. For example, a 'C022' drive can be used in Normal Duty mode on an 11 kW motor, or in Heavy-duty mode on a 7.5 kW motor. A 'C015' drive can be used in Heavy-duty mode on a 5.5 kW motor with the same ratings as a 'C011'. The drive can be programmed for either mode. Wiring and fuses can be sized based on the programmed mode. For any given drive catalog number, Normal Duty mode provides higher continuous current but smaller overload current regarding Heavy-duty mode. See parameter 306 [Duty Rating].

(2) Enclosure codes F, N, and R only. See Frame/Rating Cross-reference in PowerFlex 750-Series AC Drives Technical Data, publication 750-TD001, for frame sizes of other enclosure types.

(3) This drive is the next larger frame size.

(4) Minimum protection device size is the lowest rated device that supplies maximum protection without nuisance tripping.

(5) Maximum protection device size is the highest rated device that supplies drive protection. For US NEC, minimum size is 125% of motor FLA. Ratings that are shown are maximum.

(6) Circuit Breaker – inverse time breaker. For US NEC, minimum size is 125% of motor FLA. Ratings that are shown are maximum.

(7) When using a circuit breaker or time-delay fuse with a drive installed in a ventilated enclosure, the enclosure volume must be greater than or equal to the minimum volume specified in this column. Application-specific thermal considerations can require a larger enclosure.

(8) Recommended motor circuit protection devices – Instantaneous trip circuit breaker. Set the trip setting to the input current of the drive and size for the continuous current of the system.

(9) For Bulletin 140M/MT with adjustable current range, set the current trip to the minimum range that the device will not trip.

(10) Manual Self-Protected (Type E) Combination Motor Controller, UL Listed for 208 Wye or Delta, 240 Wye or Delta, 480Y/277V, and 600Y/347V AC Input. Not UL Listed for use on 480V or 600V Delta/Delta, corner ground, or high-resistance ground systems.

(11) Bulletin 140M/MT devices must be Frame C (C2E/C3E), Frame D (D8E/D9E), or Frame F (F8E).

(12) Bulletin 140M /MT devices must be Frame D (D8E/D9E) or Frame F (F8E).

(13) When using a Manual Self-Protected (Type E) Combination Motor Controller, the drive must be installed in a ventilated or non-ventilated enclosure with the minimum volume that is specified in this column. Application-specific thermal considerations may require a larger enclosure.

(14) See Fuse Certification and Test Data in PowerFlex AC Drives in Common Bus Configurations Application Guidelines, publication DRIVES-AT002, for fuse self-certification and test data for Bussmann 170M and JKS fuses recommended for the DC bus fusing.

Table 22 - 240V AC and 325V DC Input Protection Devices – Wall Mount Frames 1…7

Applied Rating (1)	Frame (2)	Cont. Output [A]	Drive Sized for Normal Duty			Drive Sized for Heavy Duty			Input Quantities		AC Input Protection Devices									Input Quantities	DC Input Protection (14)
			Cat. No.	Output Overload [A]		Cat. No.	Output Overload [A]		Continuous AC Input		Dual Element Time Delay Fuse [A]		Non-time Delay Fuse [A]		Circuit Breaker Max Size (6)	Circuit Breaker, Dual Element Time Delay Fuse	Motor Circuit Protector(8)	140M/MT Type E Combination Motor Controller with Adjustable Current Range (9) (10)		Continuous DC Input	Non-time Delay Fuse
			(x = F or G)	60 s	3 s	(x = F or G)	60 s	3 s	kVA	A	Min (4)	Max (5)	Min (4)	Max (5)		Min Enclosure Volume (in.^{3})(7)		Cat. No.	Min Enclosure Volume (in.^{3}) (13)	A	
240V AC Input																				**325V DC Input**	
0.5 Hp	1	2.2	20x…B2P2	2.42	3.3	20x…B4P2	4.62	6.3	0.71	1.7	3	6	3	10	15	3840	3	140M-xxx-B25 140MT-xxx-B25 (11)	7269	2.0	JKS-6
1 Hp	1	4.2	20x…B4P2	4.62	6.3	20x…B6P8	7.48	10.2	1.4	3.3	6	10	6	15	20	3840	7	140M-xxx-B63 140MT-xxx-B63 (11)	7269	3.8	JKS-10
2 Hp	1	6.8	20x…B6P8	7.48	10.2	20x…B9P6	10.56	14.4	2.4	5.9	10	15	10	25	30	3840	15	140M-xxx-C10 140MT-xxx-C10 (11)	7269	6.9	HSJ-15
3 Hp	1	9.6	20x…B9P6	10.56	14.4	20x…B015	16.83	22.95	3.4	8.3	15	20	15	35	40	3840	15	140M-xxx-C16 140MT-xxx-C16 (11)	7269	9.7	HSJ-20
5 Hp	1	15.3	20x…B015	16.83	22.95	20x…B022(3)	24.2	33	5.70	13.7	20	30	20	50	60	3840	20	140M-xxx-C20 140MT-xxx-C20 (11)	7269	16.0	HSJ-30
0.5 Hp	2	2.2	20x…B2P2	3.3	3.96	20x…B2P2	3.3	3.96	0.7	1.7	3	6	3	10	15	3840	3	140M-xxx-B25 140MT-xxx-B25 (11)	9086	2.0	JKS-6
1 Hp	2	4.2	20x…B4P2	6.3	7.56	20x…B4P2	6.3	7.56	1.4	3.3	6	10	6	15	20	3840	7	140M-xxx-B63 140MT-xxx-B63 (11)	9086	3.8	JKS-10
2 Hp	2	6.8	20x…B6P8	10.2	12.24	20x…B6P8	10.2	12.24	2.4	5.9	10	15	10	25	30	3840	15	140M-xxx-C10 140MT-xxx-C10 (11)	9086	6.9	HSJ-15
3 Hp	2	9.6	20x…B9P6	14.4	17.28	20x…B9P6	14.4	17.28	3.4	8.3	15	20	15	35	40	3840	15	140M-xxx-C16 140MT-xxx-C16 (11)	9086	9.7	HSJ-20
5 Hp	2	15.3	20x…B015	16.83	22.95	20x…B022	24.2	33	5.7	13.7	20	30	20	50	70	3840	20	140M-xxx-C20 140MT-xxx-C20 (11)	9086	16.0	HSJ-30
7.5 Hp	2	22	20x…B022	24.2	33	20x…B028(3)	33	42	8.3	19.9	30	45	30	70	80	3840	30	140M-xxx-C25 140MT-xxx-C25(12)	9086	23.3	HSJ-45
10 Hp	3	28	20x…B028	30.8	42	20x…B042	46.2	63	10.7	25.7	40	60	40	100	125	4800	50	140M-F8E-C32	9086	30.0	HSJ-60
15 Hp	3	42	20x…B042	46.2	63	20x…B054(3)	63	81	16.0	38.5	60	80	60	150	150	4800	60	140M-F8E-C45	9086	45.0	HSJ-90
20 Hp	4	54	20x…B054	59.4	81	20x…B070(3)	81	105	20.6	49.5	80	100	80	175	225	4800	100			57.9	HSJ-100
25 Hp	5	70	20x…B070	77	105	20x…B080	105	126	26.7	64.2	90	150	90	225	300	7200	100			75.0	HSJ-150
30 Hp	5	80	20x…B080	88	120	20x…B104(3)	120	156	30.5	73.4	100	175	100	300	350	7200	150			85.8	HSJ-200
40 Hp	6	104	20x…B104	114.4	156	20x…B130	156	195	40.6	97.6	150	200	150	350	350		150			114.1	HSJ-225
50 Hp	6	130	20x…B130	143	195	20x…B154	195	234	50.7	122.1	175	250	200	450	450		250			142.6	HSJ-300
60 Hp	6	154	20x…B154	169.4	231	20x…B192	231	288	60.1	144.6	225	300	225	500	500		250			169.0	HSJ-350
75 Hp	6	192	20x…B192	211.2	288	20x…B260	286	390	74.9	180.3	250	350	250	600	600		400			210.6	HSJ-400
100 Hp	6	260	20x…B260	286	390	20x…B312(3)	390	468	101.5	244.11	350	500	350	750	700		400			285.3	HSJ-400

Table 22 - 240V AC and 325V DC Input Protection Devices – Wall Mount Frames 1…7 (Continued)

Applied Rating (1)	Frame (2)	Cont. Output [A]	Drive Sized for Normal Duty			Drive Sized for Heavy Duty			Input Quantities		AC Input Protection Devices									Input Quantities	DC Input Protection (14)
			Cat. No.	Output Overload [A]		Cat. No.	Output Overload [A]		Continuous AC Input		Dual Element Time Delay Fuse [A]		Non-time Delay Fuse [A]		Circuit Breaker Max Size (6)	Circuit Breaker, Dual Element Time Delay Fuse	Motor Circuit Protector(8)	140M/MT Type E Combination Motor Controller with Adjustable Current Range (9) (10)		Continuous DC Input	Non-time Delay Fuse
			(x = F or G)	60 s	3 s	(x = F or G)	60 s	3 s	kVA	A	Min (4)	Max (5)	Min (4)	Max (5)		Min Enclosure Volume (in.^{3})(7)		Cat. No.	Min Enclosure Volume (in.^{3}) (13)	A	
125 Hp	7	312	20x…B312	343.2	468	20x…B360	468	561.6	121.8	292.9	400	600	400	900	1000		600			342.3	Bussman 470MM608
150 Hp	7	360	20x…B360	396	540				140.5	338.0	500	700	500	1000	1200		600			395.0	Bussman 470MM612
200 Hp	7	477	20x…B477	524.7	715.5				186.2	447.8	600	900	600	1400	1200		600			523.3	Bussman 470MM613

(1) 'Applied Rating' refers to the motor that will be connected to the drive. For example, a 'C022' drive can be used in Normal Duty mode on an 11 kW motor, or in Heavy-duty mode on a 7.5 kW motor. A 'C015' drive can be used in Heavy-duty mode on a 5.5 kW motor with the same ratings as a 'C011'. The drive can be programmed for either mode. Wiring and fuses can be sized based on the programmed mode. For any given drive catalog number, Normal Duty mode provides higher continuous current but smaller overload current regarding Heavy-duty mode. See parameter 306 [Duty Rating].
(2) Enclosure codes F, N, and R only. See Frame/Rating Cross-reference in PowerFlex 750-Series AC Drives Technical Data, publication 750-TD001, for frame sizes of other enclosure types.
(3) This drive is the next larger frame size.
(4) Minimum protection device size is the lowest rated device that supplies maximum protection without nuisance tripping.
(5) Maximum protection device size is the highest rated device that supplies drive protection. For US NEC, minimum size is 125% of motor FLA. Ratings that are shown are maximum.
(6) Circuit Breaker – inverse time breaker. For US NEC, minimum size is 125% of motor FLA. Ratings that are shown are maximum.
(7) When using a circuit breaker or time-delay fuse with a drive installed in a ventilated enclosure, the enclosure volume must be greater than or equal to the minimum volume specified in this column. Application-specific thermal considerations can require a larger enclosure.
(8) Recommended motor circuit protection devices – Instantaneous trip circuit breaker. Set the trip setting to the input current of the drive and size for the continuous current of the system.
(9) For Bulletin 140M/MT with adjustable current range, set the current trip to the minimum range that the device will not trip.
(10) Manual Self-Protected (Type E) Combination Motor Controller, UL Listed for 208 Wye or Delta, 240 Wye or Delta, 480Y/277V, and 600Y/347V AC Input. Not UL Listed for use on 480V or 600V Delta/Delta, corner ground, or high-resistance ground systems.
(11) Bulletin 140M /MT devices must be Frame C (C2E/C3E), Frame D (D8E/D9E), or Frame F (F8E).
(12) Bulletin 140M /MT devices must be Frame D (D8E/D9E) or Frame F (F8E).
(13) When using a Manual Self-Protected (Type E) Combination Motor Controller, the drive must be installed in a ventilated or non-ventilated enclosure with the minimum volume that is specified in this column. Application-specific thermal considerations may require a larger enclosure.
(14) See Fuse Certification and Test Data in PowerFlex AC Drives in Common Bus Configurations Application Guidelines, publication DRIVES-AT002, for fuse self-certification and test data for Bussmann 170M and JKS fuses recommended for the DC bus fusing.

Table 23 - 400V AC and 540V DC Input Protection Devices – Wall Mount Frames 1…7

Applied Rating (1)	Frame (2)	Cont. Output [A]	Drive Sized for Normal Duty			Drive Sized for Heavy Duty			Input Quantities		AC Input Protection Devices									Input Quantities	DC Input Protection (14)
			Cat. No.	Output Overload [A]		Cat. No.	Output Overload [A]		Continuous AC Input		Dual Element Time Delay Fuse [A]		Non-time Delay Fuse [A]		Circuit Breaker Max Size (6)	Circuit Breaker, Dual Element Time Delay Fuse	Motor Circuit Protector(8)	140M/MT Type E Combination Motor Controller with Adjustable Current Range (9) (10)		Continuous DC Input	Non-time Delay Fuse
			(x = F or G)	60 s	3 s	(x = F or G)	60 s	3 s	kVA	A	Min (4)	Max (5)	Min (4)	Max (5)		Min Enclosure Volume (in.^{3})(7)		Cat. No.	Min Enclosure Volume (in.^{3}) (13)	A	
400V AC Input																				**540V DC Input**	
0.37 kW	1	1.3				20x…C2P1	2.3	3.2	0.7	1.1	2	3	2	3	15	3840	3	140M-xxx-B25 140MT-xxx-B25 (11)	7269	1.2	JKS-6
0.75 kW	1	2.1	20x…C2P1	2.3	3.2	20x…C3P5	3.9	5.3	1.2	1.7	2	3	2	3	15	3840	3	140M-xxx-B25 140MT-xxx-B25 (11)	7269	2.1	JKS-6
1.5 kW	1	3.5	20x…C3P5	3.9	5.3	20x…C5P0	5.5	7.5	1.9	2.8	6	6	6	6	15	3840	7	140M-xxx-B40 140MT-xxx-B40 (11)	7269	3.7	JKS-8
2.2 kW	1	5	20x…C5P0	5.5	7.5	20x…C8P7	9.6	13.1	3.1	4.5	6	6	6	6	20	3840	7	140M-xxx-B63 140MT-xxx-B63 (11)	7269	5.3	JKS-10
4.0 kW	1	8.7	20x…C8P7	9.6	13.1	20x…C011	13.1	17.3	5.4	7.8	10	15	10	15	30	3840	15	140M-xxx-C10 140MT-xxx-C10 (11)	7269	9.3	HSJ15
5.5 kW	1	11.5	20x…C011	12.7	17.3	20x…C015	17.3	23.1	7.4	10.7	15	20	15	20	45	3840	15	140M-xxx-C16 140MT-xxx-C16 (11)	7269	12.6	HSJ20
7.5 kW	1	15.4	20x…C015	16.9	23.1				10.1	14.6	20	25	20	25	60	3840	20	140M-xxx-C20 140MT-xxx-C20 (11)	7269	17.0	HSJ25
0.75 kW	2	2.1	20x…C2P1	3.1	3.7	20x…C2P1	3.1	3.7	1.2	1.7	3	6	3	8	15	3840	3	140M-xxx-B25 140M-xxx-B25 (11)	9086	2.1	JKS-6
1.5 kW	2	3.5	20x…C3P5	5.2	6.3	20x…C3P5	5.2	6.3	1.9	2.8	6	7	6	12	15	3840	7	140M-xxx-B40 140MT-xxx-B40 (11)	9086	3.7	JKS-8
2.2 kW	2	5	20x…C5P0	7.5	9.0	20x…C5P0	7.5	9.0	3.1	4.5	6	10	6	20	20	3840	7	140M-xxx-B63 140MT-xxx-B63 (11)	9086	5.3	JKS-10
4.0 kW	2	8.7	20x…C8P7	13.0	15.6	20x…C8P7	13.0	15.6	5.4	7.8	10	17.5	10	30	30	3840	15	140M-xxx-C10 140MT-xxx-C10 (11)	9086	9.3	HSJ15
5.5 kW	2	11.5	20x…C011	17.2	20.7	20x…C011	17.2	20.7	7.4	10.7	15	25	15	45	45	3840	15	140M-xxx-C16 140MT-xxx-C16 (11)	9086	12.6	HSJ20
						20x…C015	17.3	23.1	7.4	10.7	15	25	15	45	45	3840	15	140M-xxx-C16 140MT-xxx-C16 (11)	9086	12.6	HSJ20
7.5 kW	2	15.4	20x…C015	16.9	23.1	20x…C022	24.2	33.0	10.1	14.6	20	30	20	60	60	3840	20	140M-xxx-C20 140MT-xxx-C20 (11)	9086	17.0	HSJ25
11 kW	2	22	20x…C022	24.2	33.0	20x…C030(3)	33.0	45.0	14.6	21.1	30	45	30	80	80	3840	30	140M-xxx-C25 140MT-xxx-C25 (12)	9086	24.6	HSJ40
15 kW	3	30	20x…C030	33.0	45.0	20x…C037	45.0	55.5	19.9	28.7	40	60	40	120	100	4800	50	140M-F8E-C32	9086	33.6	HSJ50
18.5 kW	3	37	20x…C037	40.7	55.5	20x…C043	55.5	66.6	24.5	35.4	45	80	45	125	110	4800	50	140M-F8E-C45	9086	41.4	HSJ70
22 kW	3	43	20x…C043	47.3	64.5	20x…C060(3)	66.0	90.0	28.5	41.2	55	90	55	150	120	4800	60			48.1	HSJ90
30 kW	4	60	20x…C060	66.0	90.0	20x…C072	90.0	108.0	39.8	57.4	75	125	75	225	180	4800	100			67.1	HSJ100

Table 23 - 400V AC and 540V DC Input Protection Devices – Wall Mount Frames 1…7 (Continued)

Applied Rating (1)	Frame (2)	Cont. Output [A]	Drive Sized for Normal Duty			Drive Sized for Heavy Duty			Input Quantities		AC Input Protection Devices									Input Quantities	DC Input Protection (14)
			Cat. No.	Output Overload [A]		Cat. No.	Output Overload [A]		Continuous AC Input		Dual Element Time Delay Fuse [A]		Non-time Delay Fuse [A]		Circuit Breaker Max Size (6)	Circuit Breaker, Dual Element Time Delay Fuse	Motor Circuit Protector(8)	140M/MT Type E Combination Motor Controller with Adjustable Current Range (9) (10)		Continuous DC Input	Non-time Delay Fuse
			(x = F or G)	60 s	3 s	(x = F or G)	60 s	3 s	kVA	A	Min (4)	Max (5)	Min (4)	Max (5)		Min Enclosure Volume (in.3)(7)		Cat. No.	Min Enclosure Volume (in.3) (13)	A	
37 kW	4	72	20x…C072	79.2	108.0	20x…C085(3)	108.0	129.6	48.9	70.5	90	150	90	275	200	4800	100			82.4	HSJ125
45 kW	5	85	20x…C085	93.5	127.5	20x…C104	127.5	156.0	57.7	83.3	110	175	110	325	250	7200	150			97.3	HSJ150
55 kW	5	104	20x…C104	114.4	156.0	20x…C140(3)	156.0	210.0	71.3	102.9	130	225	130	400	300	7200	150			120.2	HSJ175
75 kW	6	140	20x…C140	154.0	210.0	20x…C170	210.0	255.0	95.0	137.2	175	300	175	550	400		250			160.3	HSJ250
90 kW	6	170	20x…C170	187.0	255.0	20x…C205	255.0	307.5	115.4	166.5	225	375	225	600	500		250			194.6	HSJ350
110 kW	6	205	20x…C205	225.5	307.5	20x…C260	307.5	390.0	139.1	200.8	275	450	275	600	600		400			234.7	HSJ350
132 kW	6	260	20x…C260	286.0	390.0	20x…C302(3)	390.0	468.0	176.5	254.7	325	575	325	750	700		400			297.7	HSJ400
160 kW	7	302	20x…C302	332.2	453.0	20x…C367	453.0	550.5	205.0	295.9	400	675	400	900	900		600			345.7	Bussman 170M6608
200 kW	7	367	20x…C367	403.7	550.5	20x…C456	550.5	684.0	249.1	359.5	475	800	475	1000	1100		600			420.2	Bussman 170M6612
						20x…C477	550.5	684.0	249.1	359.5	475	800	475	1000	1100		600			420.2	Bussman 170M6612
250 kW	7	456	20x…C456	501.6	684.0				309.5	446.7	600	1000	600	1800	1300		600			522.0	Bussman 170M6613
270 kW	7	477	20x…C477	524	715.5				323.8	467.3	600	1000	600	1400	1400		600			546.0	Bussman 170M6613

(1) 'Applied Rating' refers to the motor that will be connected to the drive. For example, a 'C022' drive can be used in Normal Duty mode on an 11 kW motor, or in Heavy-duty mode on a 7.5 kW motor. A 'C015' drive can be used in Heavy-duty mode on a 5.5 kW motor with the same ratings as a 'C011'. The drive can be programmed for either mode. Wiring and fuses can be sized based on the programmed mode. For any given drive catalog number, Normal Duty mode provides higher continuous current but smaller overload current regarding Heavy-duty mode. See parameter 306 [Duty Rating].
(2) Enclosure codes F, N, and R only. See Frame/Rating Cross-reference in PowerFlex 750-Series AC Drives Technical Data, publication 750-TD001, for frame sizes of other enclosure types.
(3) This drive is the next larger frame size.
(4) Minimum protection device size is the lowest rated device that supplies maximum protection without nuisance tripping.
(5) Maximum protection device size is the highest rated device that supplies drive protection. For US NEC, minimum size is 125% of motor FLA. Ratings that are shown are maximum.
(6) Circuit Breaker – inverse time breaker. For US NEC, minimum size is 125% of motor FLA. Ratings that are shown are maximum.
(7) When using a circuit breaker or time-delay fuse with a drive installed in a ventilated enclosure, the enclosure volume must be greater than or equal to the minimum volume specified in this column. Application-specific thermal considerations can require a larger enclosure.
(8) Recommended motor circuit protection devices – Instantaneous trip circuit breaker. Set the trip setting to the input current of the drive and size for the continuous current of the system.
(9) For Bulletin 140M/MT with adjustable current range, set the current trip to the minimum range that the device will not trip.
(10) Manual Self-Protected (Type E) Combination Motor Controller, UL Listed for 480Y/277V and 600Y/347V AC Input. Not UL Listed for use on 480V or 600V Delta/Delta, corner ground, or high-resistance ground systems.
(11) Bulletin 140M /MT devices must be frame C (C2E/C3E), frame D (D8E/D9E), or frame F (F8E).
(12) Bulletin 140M /MT devices must be frame D (D8E/D9E) or frame F (F8E).
(13) When using a Manual Self-Protected (Type E) Combination Motor Controller, the drive must be installed in a ventilated or non-ventilated enclosure with the minimum volume that is specified in this column. Application-specific thermal considerations may require a larger enclosure.
(14) See Fuse Certification and Test Data in PowerFlex AC Drives in Common Bus Configurations Application Guidelines, publication DRIVES-AT002, for fuse self-certification and test data for Bussmann 170M and JKS fuses recommended for the DC bus fusing.

Table 24 - 400V AC and 540V DC Input Protection Devices – Floor Mount Frames 8…10

Applied Rating (1)	Frame	Cont. Output [A]	Duty	Cat. No.	Output Overload [A]		Continuous AC Input	AC Input Integral Semiconductor Fuse Size (170M) (2)	DC Bay to Bay Integral Semiconductor Fuse Size (170M)	AC Input Protection Devices Recommended for Branch Circuit Protection (Does not apply to 21G Drives with Options)								Input Quantities	DC Input Integral Semiconductor Fuse Size (170M) (8)
										Dual Element Time Delay Fuse [A[			Non-Time Delay Fuse [A]			Circuit Breaker Max Size (6)	Motor Circuit Protector (7)	Continuous DC Input	
					60 s	3 s	A	A	A	1/Phase Min (4)	2/Phase Min (4)	Max (5)	1/Phase Min (4)	2/Phase Min (4)	Max (5)			A	A
400V AC Input																		**540V DC Input**	
200 kW	8	385	Heavy	20G…C460	578	693	380	1100	—	500	—	850	500	—	1100	1100	500	443	1600
250 kW	8	460	Normal	20G…C460	506	693	455	1100	—	600	—	1000	600	—	1300	1300	600	529	1600
		456	Heavy	20G…C540	684	821	450	1100	—	600	—	1000	600	—	1300	1300	600	525	1600
		472	Heavy	20G…C567	708	851	466	1100	—	600	—	1000	600	—	1400	1400	600	543	1600
315 kW	8	540	Light	20G…C460	594	–	534	1100	—	700	350	1200	700	350	1600	1600	700	621	1600
		540	Normal	20G…C540	594	821	533	1100	—	700	350	1200	700	350	1600	1600	700	621	1600
		540	Heavy	20G…C650	810	975	533	1100	—	700	—	1200	700	—	1600	1600	700	621	1600
315 kW	8	585	Light	20G…C540	644	–	578	1100	—	750	375	1300	750	375	1700	1700	800	673	1600
		567	Normal	20G…C567	624	851	560	1100	—	750	375	1200	750	375	1700	1700	700	652	1600
		585	Heavy	20G…C750	878	1125	577	1100	—	750	375	1300	750	375	1700	1700	800	673	1600
355 kW	8	612	Light	20G…C567	673	–	604	1100	—	800	400	1300	800	400	1800	1800	800	704	1600
		650	Normal	20G…C650	715	975	640	1100	—	850	425	1400	850	425	1900	1900	800	748	1600
		642	Heavy	20G…C770	963	1155	634	1100	—	800	400	1400	800	400	1900	1900	800	739	1600
400 kW	8	750	Light	20G…C650	825	–	739	1100	—	1000	500	1600	1000	500	2200	2200	1000	863	1600
		750	Normal	20G…C750	825	1125	739	1100	—	1000	500	1600	1000	500	2200	2200	1000	863	1600
		770	Normal	20G…C770	847	1155	758	1100	—	1000	500	1700	1000	500	2300	2300	1000	886	1600
450 kW	8	796	Light	20G…C750	876	–	784	1100	—	1000	500	1700	1000	500	2300	2300	1000	916	1600
		832	Light	20G…C770	915	–	819	1100	—	1100	550	1800	1100	550	2400	2400	1200	957	1600
400 kW	9	750	Heavy	20G…C910	1125	1365	739	1100	1400 (3)	900	450	1700	900	450	2200	2200	900	863	1600 (3)
500 kW	9	880	Heavy	20G…C1K0	1320	1584	867	1100	1400 (3)	1100	550	2000	1100	550	2600	2600	1100	1013	1600 (3)
		910	Heavy	20G…C1K1	1365	1638	896	1100	1400 (3)	1100	550	2000	1100	550	2700	2700	1100	1047	1600 (3)
		910	Normal	20G…C910	1001	1365	896	1100	1400 (3)	1100	550	2000	1100	550	2700	2700	1100	1047	1600 (3)
560 kW	9	1040	Light	20G…C910	1144	–	1024	1100	1400 (3)	1300	650	2300	1300	650	3100	3100	1300	1197	1600 (3)
		1040	Normal	20G…C1K0	1144	1584	1024	1100	1400 (3)	1300	650	2300	1300	650	3100	3100	1300	1197	1600 (3)
		1040	Heavy	20G…C1K2	1560	1872	1024	1100	1400 (3)	1300	650	2300	1300	650	3100	3100	1300	1197	1600 (3)

Table 24 - 400V AC and 540V DC Input Protection Devices – Floor Mount Frames 8…10 (Continued)

Applied Rating (1)	Frame	Cont. Output [A]	Duty	Cat. No.	Output Overload [A]		Continuous AC Input	AC Input Integral Semiconductor Fuse Size (170M) (2)	DC Bay to Bay Integral Semiconductor Fuse Size (170M)	AC Input Protection Devices Recommended for Branch Circuit Protection (Does not apply to 21G Drives with Options)								Input Quantities	DC Input Integral Semiconductor Fuse Size (170M) (8)
										Dual Element Time Delay Fuse [A[			Non-Time Delay Fuse [A]			Circuit Breaker Max Size (6)	Motor Circuit Protector (7)	Continuous DC Input	
					60 s	3 s	A	A	A	1/Phase Min (4)	2/Phase Min (4)	Max (5)	1/Phase Min (4)	2/Phase Min (4)	Max (5)			A	A
630 kW	9	1090	Light	20G…C1K0	1199	–	1073	1100	1400 (3)	1350	675	2400	1350	675	3200	3200	1350	1254	1600 (3)
		1090	Normal	20G…C1K1	1199	1638	1073	1100	1400 (3)	1350	675	2400	1350	675	3200	3200	1350	1254	1600 (3)
		1090	Heavy	20G…C1K4	1635	2198	1073	1100	1400 (3)	1350	675	2400	1350	675	3200	3200	1350	1254	1600 (3)
710 kW	9	1175	Light	20G…C1K1	1293	–	1157	1100	1400 (3)	1450	725	2600	1450	725	3500	3500	1450	1352	1600 (3)
		1175	Normal	20G…C1K2	1293	1872	1157	1100	1400 (3)	1450	725	2600	1450	725	3500	3500	1450	1352	1600 (3)
		1175	Heavy	20G…C1K5	1763	2220	1157	1100	1400 (3)	1450	725	2600	1450	725	3500	3500	1450	1352	1600 (3)
	10	1325	Heavy	20G…C1K6	1988	2385	1305	1100	1400 (3)	1650	825	2900	1650	825	3900	3900	1650	1525	1600 (3)
800 kW	9	1465	Light	20G…C1K2	1612	–	1443	1100	1400 (3)	1800	900	3200	1800	900	4300	4300	1800	1686	1600 (3)
		1465	Normal	20G…C1K4	1612	2198	1443	1100	1400 (3)	1800	900	3200	1800	900	4300	4300	1800	1686	1600 (3)
850 kW	9	1480	Light	20G…C1K4	1628	–	1457	1100	1400 (3)	1800	900	3300	1800	900	4400	4400	1800	1703	1600 (3)
		1480	Normal	20G…C1K5	1628	2220	1457	1100	1400 (3)	1800	900	3300	1800	900	4400	4400	1800	1703	1600 (3)
900 kW	9	1600	Light	20G…C1K5	1760	–	1576	1100	1400 (3)	1950	975	3500	1950	975	4700	4700	1950	1841	1600 (3)
	10	1590	Normal	20G…C1K6	1749	2385	1566	1100	1400 (3)	1950	975	3500	1950	975	4700	4700	1950	1830	1600 (3)
1000 kW	10	1715	Light	20G…C1K6	1887	2058	1689	1100	1400 (3)	2100	1050	3800	2100	1050	5100	5100	2100	1974	1600 (3)
		1800	Heavy	20G…C2K1	2700	3240	1773	1100	1400 (3)	2200	1100	4000	2200	1100	5300	5300	2200	2071	1600 (3)
1250 kW	10	2150	Normal	20G…C2K1	2365	3240	2117	1100	1400 (3)	2650	1325	4800	2650	1325	6400	6400	2650	2474	1600 (3)
1400 kW	10	2330	Light	20G…C2K1	2563	2796	2294	1100	1400 (3)	2850	1425	5200	2850	1425	6900	6900	2850	2681	1600 (3)

(1) 'Applied Rating' refers to the motor that will be connected to the drive. For example, a 'C460' drive can be used in Normal Duty mode on a 250 kW motor, in Heavy-duty mode on a 200 kW motor or in Light-duty mode on a 315 kW motor. The drive can be programmed for each mode. Wiring and fuses can be sized based on the programmed mode. For any given drive catalog number, Normal Duty mode provides higher continuous current but smaller overload current when compared to Heavy-duty mode. See parameter 306 [Duty Rating]. See Specifications for an explanation of Duty Ratings.

(2) These AC line fuses (with blown fuse indicators) are included in the drive to provide drive short circuit protection. AC input protection devices for branch circuit protection based on US NEC are listed in the table. Each drive bay has one fuse per phase.

(3) Each drive bay has one fuse per DC line.

(4) Minimum protection device size is the lowest rated device that supplies maximum protection without nuisance tripping.

(5) Maximum protection device size is the highest rated device that supplies drive protection. For US NEC, minimum size is 125% of motor FLA. Ratings that are shown are maximum.

(6) Circuit Breaker – inverse time breaker. For US NEC, minimum size is 125% of motor FLA. Ratings that are shown are maximum.

(7) Recommended motor circuit protection devices– Instantaneous trip circuit breaker. Set the trip setting to the input current of the drive and size for the continuous current of the system.

(8) These DC line fuses (with blown fuse indicators) are included in the drive to provide drive short circuit protection.

Table 25 - 480V AC and 650V DC Input Protection Devices – Wall Mount Frames 1…7

Applied Rating [1]	Frame [2]	Cont. Output [A]	Drive Sized For Normal Duty			Drive Sized For Heavy Duty			Input Quantities		AC Input Protection Devices									Input Quantities	DC Input Protection [13]
			Cat. No.	Output Overload [A]		Cat. No.	Output Overload [A]		Continuous AC Input		Dual Element Time Delay Fuse [A]		Non-Time Delay Fuse [A]		Circuit Breaker Max Size [6]	Circuit Breaker, Dual Element Time Delay Fuse	Motor Circuit Protector [8]	140M/MT Type E Combination Motor Controller with Adjustable Current Range [9] [10]		Continuous DC Input	Non-Time Delay Fuse
			(x = F or G)	60 s	3 s	(x = F or G)	60 s	3 s	kVA	A	Min [4]	Max [5]	Min [4]	Max [5]		Min Enclosure Volume (in.^{3}) [7]		Cat. No.	Min Enclosure Volume (in.^{3}) [12]	A	
480V AC Input																				**650V DC Input**	
0.5 Hp	1	1.1				20x…D2P1	2.3	3.2	0.7	0.9	2	3	2	3	15	3840	3	140M-*xxx*-B25 140MT-*xxx*-B25 [11]	7269	1	JKS-6
1.0 Hp	1	2.1	20x…D2P1	2.3	3.2	20x…D3P4	3.7	5.1	1.3	1.6	2	3	2	3	15	3840	3	140M-*xxx*-B25 140MT-*xxx*-B25 [11]	7269	1.9	JKS-6
2.0 Hp	1	3.4	20x…D3P4	3.7	5.1	20x…D5P0	5.5	7.5	2.2	2.6	6	6	6	6	15	3840	7	140M-*xxx*-B4 0 140MT-*xxx*-B4 0 [11]	7269	3.0	JKS-6
3.0 Hp	1	5	20x…D5P0	5.5	7.5	20x…D8P0	8.8	12.0	3.2	3.9	6	6	6	6	20	3840	7	140M-*xxx*-B63 140MT-*xxx*-B63 [11]	7269	4.5	JKS-10
5.0 Hp	1	8	20x…D8P0	8.8	12.0	20x…D011	12.1	16.5	5.7	6.9	10	15	10	15	30	3840	15	140M-*xxx*-C10 140MT-*xxx*-C10 [11]	7269	8.1	HSJ15
7.5 Hp	1	11	20x…D011	12.1	16.5	20x…D014	16.5	21.0	7.9	9.5	15	20	15	20	40	3840	15	140M-*xxx*-C16 140MT-*xxx*-C16 [11]	7269	11.1	HSJ20
10 Hp	1	14	20x…D014	15.4	21.0				10.4	12.5	20	25	20	25	50	3840	20	140M-*xxx*-C16 140MT-*xxx*-C16 [11]	7269	14.7	HSJ30
1.0 Hp	2	2.1	20x…D2P1	3.1	3.7	20x…D2P1	3.1	3.7	1.3	1.6	2	6	2	8	15	3840	3	140M-*xxx*-B25 140MT-*xxx*-B25 [11]	9086	1.9	JKS-6
2.0 Hp	2	3.4	20x…D3P4	5.1	6.1	20x…D3P4	5.1	6.1	2.2	2.6	4	7	4	12	15	3840	7	140M-*xxx*-B40 140MT-*xxx*-B40 [11]	9086	3.0	JKS-6
3.0 Hp	2	5	20x…D5P0	7.5	9.0	20x…D5P0	7.5	9.0	3.2	3.9	6	10	6	20	20	3840	7	140M-*xxx*-B63 140MT-*xxx*-B63 [11]	9086	4.5	JKS-10
5.0 Hp	2	8	20x…D8P0	12.0	14.4	20x…D8P0	12.0	14.4	5.7	6.9	10	17.5	10	30	30	3840	15	140M-*xxx*-C10 140M-*xxx*-C10 [11]	9086	8.1	HSJ15
7.5 Hp	2	11	20x…D011	16.5	19.8	20x…D011	16.5	19.8	7.9	9.5	12	20	12	40	40	3840	15	140M-*xxx*-C16 140MT-*xxx*-C16 [11]	9086	11.1	HSJ20
						20x…D014	16.5	21.0	7.9	9.5	12	20	12	40	40	3840	15	140M-*xxx*-C16 140MT-*xxx*-C16 [11]	9086	11.1	HSJ20
10 Hp	2	14	20x…D014	15.4	21.0	20x…D022	21.0	33.0	10.4	12.5	20	30	20	55	50	3840	20	140M-*xxx*-C16 140MT-*xxx*-C16 [11]	9086	14.7	HSJ30
15 Hp	2	22	20x…D022	24.2	33.0	20x…D027 [3]	33.0	40.5	16.6	19.9	30	50	30	80	80	3840	30	140M-*xxx*-C25 140MT-*xxx*-C25 [11]	9086	23.3	HSJ40
20 Hp	3	27	20x…D027	29.7	40.5	20x…D034	40.5	51.0	20.6	24.8	35	60	35	100	100	4800	50	140M-F8E-C32	9086	28.9	HSJ50
25 Hp	3	34	20x…D034	37.4	51.0	20x…D040	51.0	61.2	25.9	31.2	45	75	45	125	100	4800	50	140M-F8E-C45	9086	36.4	HSJ60
30 Hp	3	40	20x…D040	44.0	60.0	20x…D052 [3]	60.0	78.0	30.5	36.7	50	90	50	150	120	4800	50	140M-F8E-C45	9086	42.9	HSJ80
40 Hp	4	52	20x…D052	57.2	78.0	20x…D065	78.0	97.5	39.7	47.7	65	110	65	200	150	4800	70			55.7	HSJ90

Table 25 - 480V AC and 650V DC Input Protection Devices – Wall Mount Frames 1…7 (Continued)

Applied Rating (1)	Frame (2)	Cont. Output [A]	Drive Sized For Normal Duty			Drive Sized For Heavy Duty			Input Quantities		AC Input Protection Devices									Input Quantities	DC Input Protection (13)
			Cat. No.	Output Overload [A]		Cat. No.	Output Overload [A]		Continuous AC Input		Dual Element Time Delay Fuse [A]		Non-Time Delay Fuse [A]		Circuit Breaker Max Size (6)	Circuit Breaker, Dual Element Time Delay Fuse	Motor Circuit Protector (8)	140M/MT Type E Combination Motor Controller with Adjustable Current Range (9) (10)		Continuous DC Input	Non-Time Delay Fuse
			(x = F or G)	60 s	3 s	(x = F or G)	60 s	3 s	kVA	A	Min (4)	Max (5)	Min (4)	Max (5)		Min Enclosure Volume (in.^{3}) (7)		Cat. No.	Min Enclosure Volume (in.^{3}) (12)	A	
50 Hp	4	65	20x…D065	71.5	97.5	20x…D077 (3)	97.5	117.0	49.6	59.6	90	125	90	250	175	4800	100			69.7	HSJ100
60 Hp	5	77	20x…D077	84.7	115.5	20x…D096	115.5	144.0	60.1	72.3	100	170	100	300	225	7200	100			84.5	HSJ150
75 Hp	5	96	20x…D096	105.6	144.0	20x…D125 (3)	144.0	187.5	74.9	90.1	125	200	125	375	275	7200	125			105.3	HSJ175
100 Hp	6	125	20x…D125	137.5	187.5	20x…D156	187.5	234.0	97.6	117.4	175	275	175	500	375		250			137.1	HSJ200
125 Hp	6	156	20x…D156	171.6	234.0	20x…D186	234.0	280.8	121.8	146.5	200	350	200	600	450		250			171.2	HSJ300
150 Hp	6	186	20x…D186	204.6	279.0	20x…D248	279.0	372.0	145.2	174.6	250	400	250	600	550		250			204.1	HSJ400
200 Hp	6	248	20x…D248	272.8	372.0	20x…D302 (3)	372.0	453.0	193.6	232.8	325	550	325	700	700		400			272.1	HSJ400
250 Hp	7	302	20x…D302	332.2	453.0	20x…D361	453.0	543.6	235.7	283.5	400	675	400	900	900		600			331.3	Bussman 170M6608
300 Hp	7	361	20x…D361	397.1	541.5	20x…D415	541.5	649.8	281.8	338.9	475	800	475	1000	1000		600			396.1	Bussman 170M6612
						20x…D477	541.5	649.8	281.8	338.9	475	800	475	1000	1000		600			396.1	Bussman 170M6612
350 Hp	7	415	20x…D415	456.5	622.5				323.9	389.6	525	900	525	1200	1200		600			455.3	Bussman 170M6612
400 Hp	7	477	20x…D477	524.7	715.5				372.3	447.8	600	1000	600	1400	1400		600			523.3	Bussman 170M6613

(1) 'Applied Rating' refers to the motor that will be connected to the drive. For example, a 'D022' drive can be used in Normal Duty mode on a 15 Hp motor, or in Heavy-duty mode on a 10 Hp motor. A 'D014' drive can be used in Heavy-duty mode on a 7.5 Hp motor with the same ratings as a 'D011'. The drive can be programmed for either mode. Wiring and fuses can be sized based on the programmed mode. For any given drive catalog number, Normal Duty mode provides higher continuous current but smaller overload current that is compared to Heavy-duty mode. See parameter 306 [Duty Rating].
(2) Enclosure codes F, N, and R only. See Frame/Rating Cross-reference in PowerFlex 750-Series AC Drives Technical Data, publication 750-TD001, for frame sizes of other enclosure types.
(3) This drive is the next larger frame size.
(4) Minimum protection device size is the lowest rated device that supplies maximum protection without nuisance tripping.
(5) Maximum protection device size is the highest rated device that supplies drive protection. For US NEC, minimum size is 125% of motor FLA. Ratings that are shown are maximum.
(6) Circuit Breaker – inverse time breaker. For US NEC, minimum size is 125% of motor FLA. Ratings that are shown are maximum.
(7) When using a circuit breaker or time-delay fuse with a drive installed in a ventilated enclosure, the enclosure volume must be greater than or equal to the minimum volume specified in this column. Application-specific thermal considerations can require a larger enclosure.
(8) Recommended motor circuit protection devices – Instantaneous trip circuit breaker. Set the trip setting to the input current of the drive and size for the continuous current of the system.
(9) For Bulletin 140M/MT with adjustable current range, set the current trip to the minimum range that the device will not trip.
(10) Manual Self-Protected (Type E) Combination Motor Controller, UL Listed for 480Y/277V and 600Y/347V AC Input. Not UL Listed for use on 480V or 600V Delta/Delta, corner ground, or high-resistance ground systems.
(11) Bulletin 140M /MT devices must be frame C (C2E/C3E), frame D (D8E/D9E), or frame F (F8E).
(12) When using a Manual Self-Protected (Type E) Combination Motor Controller, the drive must be installed in a ventilated or non-ventilated enclosure with the minimum volume that is specified in this column. Application-specific thermal considerations may require a larger enclosure.
(13) See Fuse Certification and Test Data in PowerFlex AC Drives in Common Bus Configurations Application Guidelines, publication DRIVES-AT002, for fuse self-certification and test data for Bussmann 170M and JKS fuses recommended for the DC bus fusing.

Table 26 - 480V AC and 650V DC Input Protection Devices – Floor Mount Frames 8…10

Applied Rating[1]	Frame	Cont. Output [A]	Duty	Cat. No.	Output Overload [A]		Continuous AC Input	AC Input Integral Semiconductor Fuse Size (170M)[2]	DC Bay to Bay Integral Semiconductor Fuse Size (170M)	AC Input Protection Devices Recommended for Branch Circuit Protection (Does not apply to 21G Drives with Options)								Input Quantities	DC Input Integral Semiconductor Fuse Size (170M)[8]
										Dual Element Time Delay Fuse [A]			Non-Time Delay Fuse [A]			Circuit Breaker Max Size[6]	Motor Circuit Protector[7]	Continuous DC Input	
					60 s	3 s	A	A	A	1/Phase Min[4]	2/Phase Min[4]	Max[5]	1/Phase Min[4]	2/Phase Min[4]	Max[5]			A	A
480V AC Input																		**650V DC Input**	
300 Hp	8	370	Heavy	20G…D430	555	666	349	1100	—	450	—	800	450	—	1100	1100	450	407	1600
350 Hp	8	430	Normal	20G…D430	473	666	406	1100	—	550	—	900	550	—	1200	1200	550	473	1600
		414	Heavy	20G…D485	621	745	391	1100	—	500	—	900	500	—	1200	1200	500	455	1600
		454	Heavy	20G…D545	681	818	428	1100	—	550	—	1000	550	—	1300	1300	550	499	1600
400 Hp	8	485	Light	20G…D430	534	—	458	1100	—	600	—	1000	600	—	1400	1400	600	533	1600
		485	Normal	20G…D485	534	745	458	1100	—	600	—	1000	600	—	1400	1400	600	533	1600
		485	Heavy	20G…D617	728	926	458	1100	—	600	—	1000	600	—	1400	1400	600	533	1600
450 Hp	8	545	Light	20G…D485	600	—	514	1100	—	650	—	1200	650	—	1600	1600	650	599	1600
		545	Normal	20G…D545	600	818	514	1100	—	650	—	1200	650	—	1600	1600	650	599	1600
		545	Heavy	20G…D710	818	1065	514	1100	—	650	325	1200	650	325	1600	1600	650	599	1600
500 Hp	8	590	Light	20G…D545	649	—	557	1100	—	700	—	1300	700	—	1700	1700	700	649	1600
		617	Normal	20G…D617	679	926	582	1100	—	750	325	1300	750	325	1800	1800	800	678	1600
		617	Heavy	20G…D740	926	1110	582	1100	—	750	375	1300	750	375	2400	1800	800	678	1600
600 Hp	8	710	Light	20G…D617	781	—	670	1100	—	850	425	1500	850	425	2100	2100	900	781	1600
		710	Normal	20G…D710	781	1065	670	1100	—	850	425	1500	850	425	2100	2100	900	781	1600
650 Hp	8	765	Light	20G…D710	842	—	722	1100	—	1000	500	1700	1000	500	2200	2200	1000	841	1600
		740	Normal	20G…D740	814	1110	698	1100	—	900	450	1600	900	450	2200	2200	900	814	1600
700 Hp	8	800	Light	20G…D740	880	—	755	1100	—	1000	500	1800	1000	500	1800	2400	1000	880	1600
600 Hp	9	710	Heavy	20G…D800	1065	1278	670	1100	1400[3]	850	425	1500	850	425	2000	2000	850	781	1600[3]
700 Hp	9	795	Heavy	20G…D960	1193	1440	750	1100	1400[3]	950	475	1700	950	475	2300	2300	950	874	1600[3]
		800	Normal	20G…D800	880	1278	755	1100	1400[3]	950	475	1700	950	475	2300	2300	950	880	1600[3]
750 Hp	9	800	Heavy	20G…D1K0	1200	1568	755	1100	1400[3]	950	475	1700	950	475	2300	2300	950	880	1600[3]
800 Hp	9	960	Light	20G…D800	1056	—	906	1100	1400[3]	1150	575	2000	1150	575	2700	2700	1150	1055	1600[3]
		960	Normal	20G…D960	1056	1440	906	1100	1400[3]	1150	575	2000	1150	575	2700	2700	1150	1055	1600[3]
		960	Heavy	20G…D1K2	1440	1728	906	1100	1400[3]	1150	575	2000	1150	575	2700	2700	1150	1055	1600[3]

Table 26 - 480V AC and 650V DC Input Protection Devices – Floor Mount Frames 8…10 (Continued)

Applied Rating[1]	Frame	Cont. Output [A]	Duty	Cat. No.	Output Overload [A]		Continuous AC Input	AC Input Integral Semiconductor Fuse Size (170M)[2]	DC Bay to Bay Integral Semiconductor Fuse Size (170M)	AC Input Protection Devices Recommended for Branch Circuit Protection (Does not apply to 21G Drives with Options)								Input Quantities	DC Input Integral Semiconductor Fuse Size (170M)[8]
										Dual Element Time Delay Fuse [A]			Non-Time Delay Fuse [A]			Circuit Breaker Max Size[6]	Motor Circuit Protector[7]	Continuous DC Input	
					60 s	3 s	A	A	A	1/Phase Min[4]	2/Phase Min[4]	Max[5]	1/Phase Min[4]	2/Phase Min[4]	Max[5]			A	A
900 Hp	9	1045	Light	20G…D960	1150	—	986	1100	1400[3]	1250	625	2200	1250	625	3000	3000	1250	1149	1600[3]
		1045	Normal	20G…D1K0	1150	1568	986	1100	1400[3]	1250	625	2200	1250	625	3000	3000	1250	1149	1600[3]
		1045	Heavy	20G…D1K3	1568	2048	986	1100	1400[3]	1250	625	2200	1250	625	3000	3000	1250	1149	1600[3]
1000 Hp	9	1135	Light	20G…D1K0	1249	—	1071	1100	1400[3]	1350	675	2400	1350	675	3200	3200	1350	1248	1600[3]
		1135	Normal	20G…D1K2	1249	1728	1071	1100	1400[3]	1350	675	2400	1350	675	3200	3200	1350	1248	1600[3]
		1135	Heavy	20G…D1K4	1703	2130	1071	1100	1400[3]	1350	675	2400	1350	675	3200	3200	1350	1248	1600[3]
1100 Hp	9	1365	Light	20G…D1K2	1502	—	1288	1100	1400[3]	1600	800	2900	1600	800	3900	3900	1600	1501	1600[3]
		1365	Normal	20G…D1K3	1502	2048	1288	1100	1400[3]	1600	800	2900	1600	800	3900	3900	1600	1501	1600[3]
	10	1270	Heavy	20G…D1K5	1905	2288	1199	1100	1400[3]	1500	750	2700	1500	750	3600	3600	1500	1396	1600[3]
1250 Hp	9	1420	Light	20G…D1K3	1562	—	1340	1100	1400[3]	1700	850	3000	1700	850	4000	4000	1700	1561	1600[3]
		1420	Normal	20G…D1K4	1562	2130	1340	1100	1400[3]	1700	850	3000	1700	850	4000	4000	1700	1561	1600[3]
1350 Hp	9	1540	Light	20G…D1K4	1694	—	1453	1100	1400[3]	1800	900	3300	1800	900	4400	4400	1800	1693	1600[3]
	10	1525	Normal	20G…D1K5	1678	2288	1439	1100	1400[3]	1800	900	3200	1800	900	4300	4300	1800	1677	1600[3]
1500 Hp	10	1655	Light	20G…D1K5	1821	1986	1562	1100	1400[3]	1950	975	3500	1950	975	4700	4700	1950	1819	1600[3]
1650 Hp	10	1730	Heavy	20G…D2K0	2595	3114	1633	1100	1400[3]	2050	1025	3700	2050	1025	4900	4900	2050	1902	1600[3]
1750 Hp	10	2070	Normal	20G…D2K0	2277	3114	1953	1100	1400[3]	2450	1225	4400	2450	1225	5900	5900	2450	2276	1600[3]
2000 Hp	10	2240	Light	20G…D2K0	2464	2688	2114	1100	1400[3]	2650	1325	4800	2650	1325	6300	6300	2650	2463	1600[3]

(1) 'Applied Rating' refers to the motor that will be connected to the drive. For example, a 'D430' drive can be used in Normal Duty mode on a 350 Hp motor, in Heavy-duty mode on a 300 Hp motor or in Light-duty mode on a 400 Hp motor. The drive can be programmed for each mode. Wiring and fuses can be sized based on the programmed mode. For any given drive catalog number, Normal Duty mode provides higher continuous current but smaller overload current when compared to Heavy-duty mode. See parameter 306 [Duty Rating]. See Specifications for an explanation of Duty Ratings.

(2) These AC line fuses (with blown fuse indicators) are included in the drive to provide drive short circuit protection. AC input protection devices for branch circuit protection based on US NEC are listed in the table. Each drive bay has one fuse per phase.

(3) Each drive bay has one fuse per DC line.

(4) Minimum protection device size is the lowest rated device that supplies maximum protection without nuisance tripping.

(5) Maximum protection device size is the highest rated device that supplies drive protection. For US NEC, minimum size is 125% of motor FLA. Ratings shown are maximum.

(6) Circuit Breaker – inverse time breaker. For US NEC, minimum size is 125% of motor FLA. Ratings shown are maximum.

(7) Recommended motor circuit protection device– Instantaneous trip circuit breaker. Set the trip setting to the input current of the drive and size for the continuous current of the system.

(8) These DC line fuses (with blown fuse indicators) are included in the drive to provide drive short circuit protection.

Table 27 - 600V AC and 810V DC Input Protection Devices – Wall Mount Frames 3…7

Applied Rating[1]	Frame	Cont. Output [A]	Drive Sized For Normal Duty			Drive Sized For Heavy Duty			Continuous AC Input	AC Input Protection Devices									Input Quantities	DC Input Protection[14]
			Cat. No.	Output Overload [A]		Cat. No.	Output Overload [A]			Dual Element Time Delay Fuse [A]		Non-Time Delay Fuse [A]		Circuit Breaker Max Size[6]	Circuit Breaker, Dual Element Time Delay Fuse	Motor Circuit Protector[8]	140M/MT Type E Combination Motor Controller with Adjustable Current Range[9][10]		Continuous DC Input	Non-Time Delay Fuse
			(x = F or G)	60 s	3 s	(x = F or G)	60 s	3 s	A	Min[2]	Max[3]	Min[2]	Max[3]		Min Enclosure Volume (in.^{3})[7]		Cat. No.	Min Enclosure Volume (in.^{3})[13]	A	
600V AC Input																			**810V DC Input**	
0.5 Hp	3	0.9				20x…E1P7	1.4	2.6	0.8	1	2	1	3	3	4800	1	140M-*xxx*-B16 140MT-*xxx*-B16[11]	9086	1.0	JKS-2
1 Hp	3	1.7	20x…E1P7	1.9	2.6	20x…E2P7	2.6	4.1	1.6	2	4	2	5	5	4800	2	140M-*xxx*-B25 140MT-*xxx*-B25[11]	9086	1.9	JKS-4
2 Hp	3	2.7	20x…E2P7	3.0	4.1	20x…E3P9	4.1	5.9	2.5	3	6	3	8	8	4800	3	140M-*xxx*-B40 140MT-*xxx*-B40[11]	9086	3.0	JKS-5
3 Hp	3	3.9	20x…E3P9	4.3	5.9	20x…E6P1	5.9	9.2	3.7	5	8	5	11[4], 10[5]	11[4], 20[5]	4800	5	140M-D8E-B63	9086	4.3	JKS-8
5 Hp	3	6.1	20x…E6P1	6.7	9.2	20x…E9P0	9.2	13.5	5.7	7	13	7	15	20	4800	10	140M-D8E-B63	9086	6.7	HSJ10
7.5 Hp	3	9	20x…E9P0	9.9	13.5	20x…E011	13.5	16.5	8.4	11	19	11	25	30	4800	15	140M-*xxx*-C10 140MT-*xxx*-C10[12]	9086	9.9	HSJ15
10 Hp	3	11	20x…E011	12.1	16.5	20x…E017	16.5	25.5	10.3	13	23	13	30	40	4800	15	140M-*xxx*-C16 140MT-*xxx*-C16[12]	9086	12.0	HSJ20
15 Hp	3	17	20x…E017	18.7	25.5	20x…E022	25.5	33.0	16.0	20	36	20	50	50	4800	20	140M-F8E-C20	9086	18.6	HSJ30
20 Hp	3	22	20x…E022	24.2	33.0				20.7	26	46	26	60	70	4800	30	140M-F8E-C25	9086	24.1	HSJ40
	4	22				20x…E027	33.0	40.5	20.7	26	46	26	60	70	4800	30	140M-F8E-C25	9086	24.1	HSJ40
25 Hp	4	27	20x…E027	29.7	40.5	20x…E032	40.5	48.6	25.3	32	57	32	75	80	4800	35	140M-F8E-C32	9086	29.6	HSJ50
30 Hp	4	32	20x…E032	35.2	48.0				30.0	38	68	38	90	100	4800	40	140M-F8E-C32	9086	35.0	HSJ60
	5	32				20x…E041	48.0	61.5	30.0	38	68	38	90	100	7200	40	140M-F8E-C32	13630	35.0	HSJ60
40 Hp	5	41	20x…E041	45.1	61.5	20x…E052	61.5	78.0	38.5	48	87	48	115	120	7200	50			44.9	HSJ70
50 Hp	5	52	20x…E052	57.2	78.0				48.8	61	110	61	145	150	7200	65			56.9	HSJ90
7.5 Hp	6	9.1				20x…E012	13.7	18.0	8.5	11	19	11	25	30		15	140M-*xxx*-C10 140MT-*xxx*-C10[12]	14400	10.0	HSJ15
10 Hp	6	12	20x…E012	13.2	18.0	20x…E018	18.0	27.0	11.3	14	25	14	35	40		15	140M-*xxx*-C16 140MT-*xxx*-C16[12]	14400	13.1	HSJ20
15 Hp	6	18	20x…E018	19.8	27.0	20x…E023	27.0	34.5	16.9	21	38	21	50	60		25	140M-F8E-C20	14400	19.7	HSJ30
20 Hp	6	23	20x…E023	25.3	34.5	20x…E028	34.5	42.0	21.6	27[4], 25[5]	49[4], 50[5]	27[4], 25[5]	65	70		30	140M-F8E-C25	14400	25.2	HSJ40
	6	24	20x…E024	26.4	36.0				22.5	28	51	28	70	70		30	140M-F8E-C25	14400	26.3	HSJ40
	6	22				20x…E024	33.0	39.6	20.7	26	46	26	60	70		30	140M-F8E-C25	14400	24.1	HSJ40

Table 27 - 600V AC and 810V DC Input Protection Devices – Wall Mount Frames 3…7 (Continued)

Applied Rating(1)	Frame	Cont. Output [A]	Drive Sized For Normal Duty			Drive Sized For Heavy Duty			Continuous AC Input	AC Input Protection Devices									Input Quantities	DC Input Protection (14)
			Cat. No.	Output Overload [A]		Cat. No.	Output Overload [A]			Dual Element Time Delay Fuse [A]		Non-Time Delay Fuse [A]		Circuit Breaker Max Size(6)	Circuit Breaker, Dual Element Time Delay Fuse	Motor Circuit Protector(8)	140M/MT Type E Combination Motor Controller with Adjustable Current Range (9) (10)		Continuous DC Input	Non-Time Delay Fuse
			(x = F or G)	60 s	3 s	(x = F or G)	60 s	3 s	A	Min(2)	Max(3)	Min(2)	Max(3)		Min Enclosure Volume (in.^{3})(7)		Cat. No.	Min Enclosure Volume (in.^{3}) (13)	A	
25 Hp	6	28	20x…E028	30.8	42.0	20x…E033	42.0	50.4	26.3	35	60	35	80	80		35	140M-F8E-C32	14400	30.7	HSJ50
30 Hp	6	33	20x…E033	36.3	49.5	20x…E042	49.5	63.0	31.0	40	70	40	95	100		40	140M-F8E-C32	14400	36.1	HSJ60
40 Hp	6	42	20x…E042	46.2	63.0	20x…E053	63.0	79.5	39.4	50	90	50	120	120		50			46.0	HSJ70
50 Hp	6	53(4), 52(5)	20x…E053	58.3	79.5	20x…E063	78.0	94.5	49.8(4), 48.8(5)	60	110	60	150(4), 145(5)	150		65			58.0(4), 56.9(5)	HSJ90
60 Hp	6	63	20x…E063	69.3	94.5	20x…E077	94.5	115.5	59.1	75	135	75	175	180		75			69.0	HSJ110
75 Hp	6	77	20x…E077	84.7	115.5	20x…E099	115.5	148.5	72.3	90	165	90	215	220		95			84.3	HSJ150
100 Hp	6	99	20x…E099	108.9	148.5	20x…E125	148.5	187.5	92.9	115	210	115	280	280		120			108.4	HSJ175
125 Hp	6	125	20x…E125	137.5	187.5	20x…E144	187.5	225.0	117.4	145	265	145	350	360		150			136.8	HSJ225
150 Hp	6	144	20x…E144	158.4	216.0				135.2	170	300	170	400	400		170			157.6	HSJ250
	7	144				20x…E192	216.0	288.0	135.2	170	305	170	405	410		170			157.6	HSJ250
200 Hp	7	192	20x…E192	211.2	288.0	20x…E242	288.0	363.0	180.3	225	405	225	540	550		230			210.2	HSJ350
250 Hp	7	242	20x…E242	266.2	363.0	20x…E289	363.0	435.6	227.2	285	510	285	680	690		285			264.9	HSJ400
300 Hp	7	289	20x…E289	317.9	433.5				271.3	340	600	340	800	800		340			316.4	HSJ500

(1) 'Applied Rating' refers to the motor that will be connected to the drive. For example, a 'E063' drive can be used in Normal Duty mode on a 60 Hp motor, in Heavy-duty mode on a 50 Hp motor. The drive can be programmed for each mode. Wiring and fuses can be sized based on the programmed mode. For any given drive catalog number, Normal Duty mode provides higher continuous current but smaller overload current when compared to Heavy-duty mode. See parameter 306 [Duty Rating]. See Specifications for an explanation of Duty Ratings.
(2) Minimum protection device size is the lowest rated device that supplies maximum protection without nuisance tripping.
(3) Maximum protection device size is the highest rated device that supplies drive protection. For US NEC, minimum size is 125% of motor FLA. Ratings that are shown are maximum.
(4) Normal duty.
(5) Heavy duty.
(6) Circuit Breaker – inverse time breaker. For US NEC, minimum size is 125% of motor FLA. Ratings that are shown are maximum.
(7) When using a circuit breaker or time-delay fuse with a drive installed in a ventilated enclosure, the enclosure volume must be greater than or equal to the minimum volume specified in this column. Application-specific thermal considerations can require a larger enclosure.
(8) Recommended motor circuit protection device– Instantaneous trip circuit breaker. Set the trip setting to the input current of the drive and size for the continuous current of the system.
(9) For Bulletin 140M/MT with adjustable current range, set the current trip to the minimum range that the device will not trip.
(10) Manual Self-Protected (Type E) Combination Motor Controller, UL Listed for 480Y/277V and 600Y/347V AC Input. Not UL Listed for use on 480V or 600V Delta/Delta, corner ground, or high-resistance ground systems.
(11) Bulletin 140M /MT devices must be Frame C (C2E/C3E), Frame D (D8E/D9E), or Frame F (F8E).
(12) Bulletin 140M /MT devices must be Frame D (D8E/D9E) or Frame F (F8E).
(13) When using a Manual Self-Protected (Type E) Combination Motor Controller, the drive must be installed in a ventilated or non-ventilated enclosure with the minimum volume that is specified in this column. Application-specific thermal considerations may require a larger enclosure.
(14) See Fuse Certification and Test Data in PowerFlex AC Drives in Common Bus Configurations Application Guidelines, publication DRIVES-AT002, for fuse self-certification and test data for Bussmann 170M and JKS fuses recommended for the DC bus fusing.

Table 28 - 600V AC and 810V DC Input Protection Devices – Floor Mount Frames 8…10

Applied Rating[1]	Frame	Cont. Output [A]	Duty	Cat. No.	Output Overload [A]		Continuous AC Input	AC Input Integral Semiconductor Fuse Size (170M)[2]	DC Bay to Bay Integral Semiconductor Fuse Size (170M6648)	AC Input Protection Devices Recommended for Branch Circuit Protection (Does not apply to 21G Drives with Options)								Input Quantities	DC Input Integral Semiconductor Fuse Size (170M6253)[7]
										Dual Element Time Delay Fuse [A]			Non-Time Delay Fuse [A]			Circuit Breaker Max Size[5]	Motor Circuit Protector[6]	Continuous DC Input	
					60 s	3 s	A	A	A	1/Phase Min[3]	2/Phase Min[3]	Max[4]	1/Phase Min[3]	2/Phase Min[3]	Max[4]			A	A
600V AC Input																		**810V DC Input**	
250 Hp	8	272	Heavy	20G…E295	408	490	257	900	—	350	175	600	350	175	800	800	350	300	1000
300 Hp	8	295	Heavy	20G…E355	443	533	278	900	—	350	175	700	350	175	900	900	350	325	1000
		295	Normal	20G…E295	325	490	278	900	—	400	200	700	400	200	1000	1000	400	325	1000
350 Hp	8	355	Light	20G…E295	391	—	335	900	—	450	225	800	450	225	1100	1100	450	391	1000
		355	Normal	20G…E355	391	533	335	900	—	450	225	800	450	225	1100	1100	450	391	1000
		329	Heavy	20G…E395	494	593	310	900	—	400	200	700	400	200	1000	1000	400	363	1000
		355	Heavy	20G…E435	533	639	335	900	—	450	225	800	450	225	1100	1100	450	391	1000
400 Hp	8	395	Light	20G…E355	435	—	373	900	—	500	250	900	500	250	1200	1200	500	436	1000
		395	Normal	20G…E395	435	593	373	900	—	500	250	900	500	250	1200	1200	500	436	1000
		395	Heavy	20G…E460	593	711	373	900	—	500	250	900	500	250	1200	1200	500	436	1000
450 Hp	8	435	Light	20G…E395	479	—	411	900	—	550	275	1000	550	275	1300	1300	550	480	1000
		435	Normal	20G…E435	479	639	411	900	—	500	250	900	500	250	1200	1200	500	480	1000
		425	Heavy	20G…E510	638	765	401	900	—	550	275	1000	550	275	1300	1300	550	469	1000
500 Hp	8	460	Light	20G…E435	506	—	434	900	—	550	275	1000	550	275	1300	1300	550	507	1000
		510	Light	20G…E460	561	—	481	900	—	650	325	1100	650	325	1500	1500	650	562	1000
		460	Normal	20G…E460	506	711	434	900	—	550	275	1000	550	275	1300	1300	550	507	1000
		510	Normal	20G…E510	561	765	481	900	—	650	325	1100	650	325	1500	1500	650	562	1000
550 Hp	8	545	Light	20G…E510	600	—	514	900	—	650	325	1200	650	325	1600	1600	650	601	1000
500 Hp	9	510	Heavy	20G…E595	765	918	481	900	1000	600	300	1100	600	300	1400	1400	600	562	1000
600 Hp	9	595	Heavy	20G…E630	893	1071	562	900	1000	700	350	1300	700	350	1700	1700	700	656	1000
		595	Normal	20G…E595	655	918	562	900	1000	700	350	1300	700	350	1700	1700	700	656	1000
700 Hp	9	630	Heavy	20G…E760	945	1149	595	900	1000	750	375	1300	750	375	1800	1800	750	695	1000
		630	Normal	20G…E630	693	1071	595	900	1000	750	375	1300	750	375	1800	1800	750	695	1000
		595	Light	20G…E595	693	—	651	900	1000	800	400	1500	800	400	2000	2000	800	761	1000
750 Hp	9	700	Heavy	20G…E825	1050	1260	661	900	1000	850	425	1500	850	425	2000	2000	850	772	1000
800 Hp	9	760	Heavy	20G…E900	1140	1368	717	900	1000	900	450	1600	900	450	2200	2200	900	838	1000
		760	Normal	20G…E760	836	1140	717	900	1000	900	450	1600	900	450	2200	2200	900	838	1000
		760	Light	20G…E630	836	—	717	900	1000	900	450	1600	900	450	2200	2200	900	838	1000

Table 28 - 600V AC and 810V DC Input Protection Devices – Floor Mount Frames 8…10 (Continued)

Applied Rating[1]	Frame	Cont. Output [A]	Duty	Cat. No.	Output Overload [A]		Continuous AC Input	AC Input Integral Semiconductor Fuse Size (170M)[2]	DC Bay to Bay Integral Semiconductor Fuse Size (170M6648)	AC Input Protection Devices Recommended for Branch Circuit Protection (Does not apply to 21G Drives with Options)								Input Quantities	DC Input Integral Semiconductor Fuse Size (170M6253)[7]
										Dual Element Time Delay Fuse [A]			Non-Time Delay Fuse [A]			Circuit Breaker Max Size[5]	Motor Circuit Protector[6]	Continuous DC Input	
					60 s	3 s	A	A	A	1/Phase Min[3]	2/Phase Min[3]	Max[4]	1/Phase Min[3]	2/Phase Min[3]	Max[4]			A	A
900 Hp	9	815	Heavy	20G…E980	1223	1470	769	900	1000	950	475	1700	950	475	2300	2300	950	899	1000
		825	Normal	20G…E825	908	1260	779	900	1000	950	475	1800	950	475	2300	2300	950	910	1000
		835	Light	20G…E760	919	—	788	900	1000	1000	500	1800	1000	500	2400	2400	1000	921	1000
950 Hp	9	900	Normal	20G…E900	990	1368	849	900	1000	1050	525	1900	1050	525	2500	2500	1050	993	1000
		900	Light	20G…E825	990	—	849	900	1000	1050	525	1900	1050	525	2500	2500	1050	993	1000
1000 Hp	9	980	Normal	20G…E980	1078	1470	925	900	1000	1150	575	2100	1150	575	2800	2800	1150	1081	1000
		980	Light	20G…E900	1078	—	925	900	1000	1150	575	2100	1150	575	2800	2800	1150	1081	1000
	10	920	Heavy	20G…E1K1	1380	1665	868	900	1000	1100	550	2000	1100	550	2600	2600	1100	1015	1000
1100 Hp	9	1045	Light	20G…E980	1150	—	986	900	1000	1250	625	2200	1250	625	3000	3000	1250	1152	1000
	10	1110	Normal	20G…E1K1	1221	1665	1048	900	1000	1300	650	2400	1300	650	3100	3100	3100	1224	1000
1200 Hp	10	1220	Light	20G…E1K1	1342	1464	1151	900	1000	1450	725	2600	1450	725	3500	3500	3500	1345	1000
1250 Hp	10	1190	Heavy	20G…E1K4	1785	2145	1123	900	1000	1400	700	2500	1400	700	3400	3400	3400	1312	1000
1400 Hp	10	1430	Normal	20G…E1K4	1573	2145	1350	900	1000	1700	850	3000	1700	850	4100	4100	4100	1577	1000
1500 Hp	10	1530	Light	20G…E1K4	1683	1836	1444	900	1000	1800	900	3200	1800	900	4300	4300	4300	1687	1000

(1) 'Applied Rating' refers to the motor that will be connected to the drive. For example, a 'E420' drive can be used in Normal Duty mode on a 450 Hp motor, in Heavy-duty mode on a 350 Hp motor or in Light-duty mode on a 500 Hp motor. The drive can be programmed for each mode. Wiring and fuses can be sized based on the programmed mode. For any given drive catalog number, Normal Duty mode provides higher continuous current but smaller overload current when compared to Heavy-duty mode. See parameter 306 [Duty Rating]. See Specifications for an explanation of Duty Ratings.

(2) These AC line fuses (with blown fuse indicators) are included in the drive to provide drive short circuit protection. AC input protection devices for branch circuit protection based on US NEC are listed in the table. Each drive bay has one fuse per phase.

(3) Minimum protection device size is the lowest rated device that supplies maximum protection without nuisance tripping.

(4) Maximum protection device size is the highest rated device that supplies drive protection. For US NEC, minimum size is 125% of motor FLA. Ratings that are shown are maximum.

(5) Circuit Breaker – inverse time breaker. For US NEC, minimum size is 125% of motor FLA. Ratings that are shown are maximum.

(6) Recommended motor circuit protection device– Instantaneous trip circuit breaker. Set the trip setting to the input current of the drive and size for the continuous current of the system.

(7) These DC line fuses (with blown fuse indicators) are included in the drive to provide drive short circuit protection.

Table 29 - 690V AC and 932V DC Input Protection Devices – Wall Mount Frames 6…7

Applied Rating[1]	Frame	Cont. Output [A]	Drive Sized For Normal Duty			Drive Sized For Heavy Duty			Continuous AC Input	AC Input Protection Devices						Input Quantities	DC Input Protection
			Cat. No.	Output Overload [A]		Cat. No.	Output Overload [A]			Dual Element Time Delay Fuse [A]		Non-Time Delay Fuse [A]		Circuit Breaker Max Size[6]	Motor Circuit Protector[7]	Continuous DC Input	Non-Time Delay Fuse
			(x = F or G)	60 s	3 s	(x = F or G)	60 s	3 s	A	Min[2]	Max[5]	Min[2]	Max[5]			A	
690V AC Input																**932V DC Input**	
5.5 kW	6	9				20x…F011	13.5	18.0	8.4	11	19	11	25	30	15	9.9	HSJ15
7.5 kW	6	12	20x…F011	13.2	18.0	20x…F015	18.0	22.5	11.2	14	25	14	35	40	15	13.2	HSJ20
11 kW	6	15	20x…F015	16.5	22.5	20x…F020	22.5	30.0	14.1	18	32	18	40	50	20	16.5	HSJ25
15 kW	6	20	20x…F020	22.0	30.0	20x…F023	30.0	36.0	18.7	23	42	23	55	60	25	21.9	HSJ35
18.5 kW	6	23	20x…F023	25.3	34.5	20x…F030	34.5	45.0	21.6	27[3], 25[4]	48[3], 50[4]	27[3], 25[4]	65	70	30	25.2	HSJ40
22 kW	6	30	20x…F030	33.0	45.0	20x…F034	45.0	54.0	28.1	35	65	35	85	90	40	32.9	HSJ50
30 kW	6	34	20x…F034	37.4	51.0	20x…F046	51.0	69.0	31.9	40	70	40	95	100	40	37.3	HSJ60
37 kW	6	46	20x…F046	50.6	69.0	20x…F050	69.0	82.8	43.1	55	95	55	130	130	55	50.5	HSJ80
45 kW	6	50	20x…F050	55.0	75.0	20x…F061	75.0	91.5	46.9	60	105	60	140	150	60	54.8	HSJ90
55 kW	6	61	20x…F061	67.1	91.5	20x…F082	91.5	123.0	57.2	70	130	70	170	180	75	66.9	HSJ100
75 kW	6	82	20x…F082	90.2	123.0	20x…F098	123.0	147.6	76.8	95	175	95	230	240	100	89.9	HSJ150
90 kW	6	98	20x…F098	107.8	147.0	20x…F119	147.0	178.5	91.8	115	205	115	275	280	115	107.5	HSJ175
110 kW	6	119	20x…F119	130.9	178.5	20x…F142	178.5	214.2	111.5	140	250	140	335	340	140	130.5	HSJ200
132 kW	6	142	20x…F142	156.2	213.0				133.1	165	300	165	400	400	170	155.7	HSJ250
	7	142				20x…F171	213.0	256.5	133.1	165	300	165	400	400	170	155.7	HSJ250
160 kW	7	171	20x…F171	188.1	256.5	20x…F212	256.5	318.0	160.2	200	360	200	480	490	205	187.5	HSJ300
200 kW	7	212	20x…F212	233.2	318.0	20x…F263	318.0	394.5	198.7	250	445	250	595	600	250	232.5	HSJ350
250 kW	7	263	20x…F263	289.3	394.5				246.5	310	555	310	740	740	310	288.4	HSJ500

(1) 'Applied Rating' refers to the motor that will be connected to the drive. For example, a 'F061' drive can be used in Normal Duty mode on a55 kW motor, in Heavy-duty mode on a 45 kW motor. The drive can be programmed for each mode. Wiring and fuses can be sized based on the programmed mode. For any given drive catalog number, Normal Duty mode provides higher continuous current but smaller overload current when compared to Heavy-duty mode. See parameter 306 [Duty Rating]. See Specifications for an explanation of Duty Ratings.

(2) Minimum protection device size is the lowest rated device that supplies maximum protection without nuisance tripping.

(3) Normal duty.

(4) Heavy duty.

(5) Maximum protection device size is the highest rated device that supplies drive protection. For US NEC, minimum size is 125% of motor FLA. Ratings that are shown are maximum.

(6) Circuit Breaker – inverse time breaker. For US NEC, minimum size is 125% of motor FLA. Ratings that are shown are maximum.

(7) Recommended motor circuit protection device– Instantaneous trip circuit breaker. Set the trip setting to the input current of the drive and size for the continuous current of the system.

Table 30 - 690V AC and 932V DC Input Protection Devices – Floor Mount Frames 8…10

Applied Rating[1]	Frame	Cont. Output [A]	Duty	Cat. No.	Output Overload [A]		Continuous AC Input	AC Input Integral Semiconductor Fuse Size (170M)[2]	DC Bay to Bay Integral Semiconductor Fuse Size (170M6648)	AC Input Protection Devices Recommended for Branch Circuit Protection (Does not apply to 21G Drives with Options)								Input Quantities	DC Input Integral Semiconductor Fuse Size (170M6253)[7]
										Dual Element Time Delay Fuse [A]			Non-Time Delay Fuse [A]			Circuit Breaker Max Size[5]	Motor Circuit Protector[6]	Continuous DC Input	
					60 s	3 s	A	A	A	1/Phase Min[3]	2/Phase Min[3]	Max[4]	1/Phase Min[3]	2/Phase Min[3]	Max[4]			Amps	Amps
690V AC Input																		**932V DC Input**	
200 kW	8	215	Heavy	20G…F265	323	375	203	900	—	250	125	500	250	125	600	600	250	237	1000
250 kW	8	265	Normal	20G…F265	292	375	250	900	—	300	150	600	300	150	800	800	300	292	1000
		265	Heavy	20G…F330	398	473	250	900	—	300	150	600	300	150	800	800	300	292	1000
300 kW	8	308	Heavy	20G…F370	462	555	290	900	—	400	200	700	400	200	900	900	400	339	1000
315 kW	8	330	Light	20G…F265	363	—	311	900	—	400	200	700	400	200	900	900	400	363	1000
		330	Normal	20G…F330	363	473	311	900	—	400	200	700	400	200	900	900	400	363	1000
355 kW	8	370	Light	20G…F330	407	—	349	900	—	450	225	800	450	225	1100	1100	450	407	1000
		370	Normal	20G…F370	407	555	349	900	—	450	225	800	450	225	1100	1100	450	407	1000
		370	Heavy	20G…F415	555	639	349	900	—	450	225	800	450	225	1100	1100	450	407	1000
375 kW	8	375	Heavy	20G…F460	563	675	353	900	—	450	225	800	450	225	1100	1100	450	413	1000
400 kW	8	410	Light	20G…F370	451	—	386	900	—	500	250	900	500	250	1200	1200	500	451	1000
		415	Normal	20G…F415	457	639	391	900	—	500	250	900	500	250	1200	1200	500	457	1000
		413	Heavy	20G…F500	620	750	389	900	—	500	250	900	500	250	1200	1200	500	454	1000
450 kW	8	460	Light	20G…F415	506	—	433	900	—	550	275	1000	550	275	1300	1300	550	506	1000
		460	Normal	20G…F460	506	675	433	900	—	550	275	1000	550	275	1300	1300	550	506	1000
500 kW	8	500	Light	20G…F460	550	—	471	900	—	600	300	1100	600	300	1500	1500	600	550	1000
		500	Normal	20G…F500	550	750	471	900	—	600	300	1100	600	300	1500	1500	600	550	1000
530 kW	8	530	Light	20G…F500	583	—	499	900	—	650	325	1200	650	325	1500	1500	650	583	1000
450 kW	9	460	Heavy	20G…F590	690	885	433	900	1000	550	275	1000	550	275	1300	1300	550	506	1000
500 kW	9	500	Heavy	20G…F650	750	975	471	900	1000	600	300	1100	600	300	1400	1400	600	550	1000
560 kW	9	590	Heavy	20G…F710	885	1065	556	900	1000	700	350	1300	700	350	1700	1700	700	649	1000
		590	Normal	20G…F590	649	885	556	900	1000	700	350	1300	700	350	1700	1700	700	649	1000
630 kW	9	650	Heavy	20G…F765	975	1170	612	900	1000	750	375	1400	750	375	1800	1800	750	715	1000
		650	Normal	20G…F650	715	975	612	900	1000	750	375	1400	750	375	1800	1800	750	715	1000
		650	Light	20G…F590	715	—	612	900	1000	750	375	1400	750	375	1800	1800	750	715	1000
710 kW	9	750	Heavy	20G…F795	1125	1350	706	900	1000	900	450	1600	900	450	2100	2100	900	825	1000
		710	Normal	20G…F710	781	1065	669	900	1000	900	450	1600	900	450	2100	2100	900	781	1000
		710	Light	20G…F650	781	—	669	900	1000	900	450	1600	900	450	2100	2100	900	781	1000

Table 30 - 690V AC and 932V DC Input Protection Devices – Floor Mount Frames 8…10 (Continued)

Applied Rating[1]	Frame	Cont. Output [A]	Duty	Cat. No.	Output Overload [A]		Continuous AC Input	AC Input Integral Semiconductor Fuse Size (170M)[2]	DC Bay to Bay Integral Semiconductor Fuse Size (170M6648)	AC Input Protection Devices Recommended for Branch Circuit Protection (Does not apply to 21G Drives with Options)								Input Quantities	DC Input Integral Semiconductor Fuse Size (170M6253)[7]
										Dual Element Time Delay Fuse [A]			Non-Time Delay Fuse [A]			Circuit Breaker Max Size[5]	Motor Circuit Protector[6]	Continuous DC Input	
					60 s	3 s	A	A	A	1/Phase Min[3]	2/Phase Min[3]	Max[4]	1/Phase Min[3]	2/Phase Min[3]	Max[4]			Amps	Amps
750 kW	9	765	Normal	20G…F765	842	1170	721	900	1000	900	450	1600	900	450	2200	2200	900	842	1000
800 kW	9	795	Heavy	20G…F960	1193	1440	749	900	1000	950	475	1700	950	475	2200	2200	950	875	1000
		795	Normal	20G…F795	875	1350	749	900	1000	950	475	1700	950	475	2200	2200	950	875	1000
		790	Light	20G…F710	869	—	744	900	1000	950	475	1700	950	475	2200	2200	950	869	1000
850 kW	9	860	Light	20G…F765	946	—	810	900	1000	1000	500	1800	1000	500	2400	2400	1000	946	1000
900 kW	9	960	Normal	20G…F960	1056	1440	904	900	1000	1150	575	2000	1150	575	2700	2700	1150	1056	1000
		960	Light	20G…F795	1056	—	904	900	1000	1150	575	2000	1150	575	2700	2700	1150	1056	1000
	10	865	Heavy	20G…F1K0	1298	1560	815	900	1000	1000	500	1800	1000	500	2400	2400	1000	952	1000
1000 kW	9	1020	Light	20G…F795	1122	—	904	900	1000	1200	600	2200	1200	600	2900	2900	1200	1056	1000
	10	1040	Normal	20G…F1K0	1144	1560	980	900	1000	1250	625	2200	1250	625	2900	2900	1250	1144	1000
1100 kW	10	1150	Light	20G…F1K0	1265	1380	1083	900	1000	1350	675	2400	1350	675	3200	3200	1350	1265	1000
1120 kW	10	1160	Heavy	20G…F1K4	1740	2100	1093	900	1000	1350	675	2500	1350	675	3300	3300	1350	1276	1000
1400 kW	10	1400	Normal	20G…F1K4	1540	2100	1319	900	1000	1650	825	3000	1650	825	4000	4000	1650	1540	1000
1500 kW	10	1485	Light	20G…F1K4	1634	1782	1399	900	1000	1750	875	3100	1750	875	4200	4200	1750	1634	1000

(1) 'Applied Rating' refers to the motor that will be connected to the drive. For example, a 'F400' drive can be used in Normal Duty mode on a 400 kW motor, in Heavy-duty mode on a 355 kW motor or in Light-duty mode on a 450 kW motor. The drive can be programmed for each mode. Wiring and fuses can be sized based on the programmed mode. For any given drive catalog number, Normal Duty mode provides higher continuous current but smaller overload current when compared to Heavy-duty mode. See parameter 306 [Duty Rating]. See Specifications for an explanation of Duty Ratings.

(2) These AC line fuses (with blown fuse indicators) are included in the drive to provide drive short circuit protection. AC input protection devices for branch circuit protection based on US NEC are listed in the table. Each drive bay has one fuse per phase.

(3) Minimum protection device size is the lowest rated device that supplies maximum protection without nuisance tripping.

(4) Maximum protection device size is the highest rated device that supplies drive protection. For US NEC, minimum size is 125% of motor FLA. Ratings that are shown are maximum.

(5) Circuit Breaker – inverse time breaker. For US NEC, minimum size is 125% of motor FLA. Ratings that are shown are maximum.

(6) Recommended motor circuit protection device– Instantaneous trip circuit breaker. Set the trip setting to the input current of the drive and size for the continuous current of the system.

(7) These DC line fuses (with blown fuse indicators) are included in the drive to provide drive short circuit protection.

Motor Overload Protection

Class 10 motor overload protection according to NEC article 430 and motor over-temperature protection according to NEC article 430.126 (A)(2). UL 508C File E59272.

Short Circuit Current Rating

The maximum short circuit rating is 200,000 A RMS symmetrical (only 20F and 20G drives).

The actual short circuit rating is determined by the AIC rating of the installed fuse or circuit breaker. See page 196 for 21G drives.

Short Circuit Current Ratings – Floor Mount Drives with Cabinet Options

Default ratings (no added protection) shown. A "•" indicates ratings that can be achieved with additional protection.

Table 31 - Short Circuit Current Ratings – 400V AC Input

Drive Cat. No.	Duty Cycle	kW	Short Circuit Current Rating (kA)			
			Circuit Breaker Only (P3) (1)	Circuit Breaker with Input Contactor (P3 with P11) (1)	Molded Case Switch Only (P5) (2)	Molded Case Switch with Input Contactor (P5 with P11) (2)
21G…C460	LD	315	100	30	65 or • 100 w/700…800 A Class L fuse	5 or • 30 w/700…1200 A Class L fuse • 30 w/700…1200 A CB
	ND	250	100	30 or • 65 w/600 A Class J fuse	65	5 or • 65 w/600 A Class J fuse • 30 w/600…1000 A Class L fuse • 30 w/600…1200 A CB
	HD	200	100	5 or • 100 w/500…600 A Class J fuse • 18 w/600…800 A Class L fuse • 18 w/500 A CB	65	5 or • 100 w/500…600 A Class J fuse • 18 w/600…800 A Class L fuse • 18 w/500 A CB
21G…C540	LD	315	100	30	65 or • 100 w/750…800 A Class L fuse	5 or • 30 w/750…1300 A Class L fuse • 30 w/800…1200 A CB
	ND	315	100	30	65 or • 100 w/700…800 A Class L fuse	5 or • 30 w/700…1200 A Class L fuse • 30 w/700…1200 A CB
	HD	250	100	30 or • 65 w/600 A Class J fuse	65	5 or • 65 w/600 A Class J fuse • 30 w/600…1000 A Class L fuse • 30 w/600…1200 A CB
21G…C567	LD	355	100	30	65 or • 100 w/800 A Class L fuse	5 or • 30 w/800…1300 A Class L fuse • 30 w/800…1200 A CB
	ND	315	100	30	65 or • 100 w/750…800 A Class L fuse	5 or • 30 w/750…1200 A Class L fuse • 30 w/800…1200 A CB
	HD	250	100	30 or • 65 w/600 A Class J fuse	65	5 or • 65 w/600 A Class J fuse • 30 w/600…1000 A Class L fuse • 30 w/600…1200 A CB
21G…C650	LD	400	100	42	65 or • 100 w/1000…1200 A Class L fuse	5 or • 42 w/1000…1600 A Class L fuse • 42 w/1000…1200 A CB
	ND	355	100	42	65 or • 100 w/850…1200 A Class L fuse	5 or • 42 w/850…1400 A Class L fuse • 42w/900…1200 A CB
	HD	315	100	30	65 or • 100 w/700…800 A Class L fuse	5 or • 30 w/700…1200 A Class L fuse • 30 w/700…1200 A CB

Table 31 - Short Circuit Current Ratings – 400V AC Input (Continued)

Drive Cat. No.	Duty Cycle	kW	Short Circuit Current Rating (kA)			
			Circuit Breaker Only (P3) (1)	Circuit Breaker with Input Contactor (P3 with P11) (1)	Molded Case Switch Only (P5) (2)	Molded Case Switch with Input Contactor (P5 with P11) (2)
21G…C750	LD	450	100	42	65 or • 100 w/1000…1200 A Class L fuse	5 or • 42 w/1000…1700 A Class L fuse • 42 w/1000…1200 A CB
	ND	400	100	42	65 or • 100 w/1000…1200 A Class L fuse	5 or • 42 w/1000…1600 A Class L fuse • 42 w/1000…1200 A CB
	HD	315	100	30	65 or • 100 w/700…800 A Class L fuse	5 or • 30 w/750…1300 A Class L fuse • 30 w/800…1200 A CB
21G…C770	LD	450	100	42	65 or • 100 w/1000…1200 A Class L fuse	5 or • 42 w/1100…1800 A Class L fuse • 42 w/1100…1200 A CB
	ND	400	100	42	65 or • 100 w/1000…1200 A Class L fuse	5 or • 42 w/1000…1700 A Class L fuse • 42 w/1000…1200 A CB
	HD	355	100	42	65 or • 100 w/700…800 A Class L fuse	5 or • 42 w/800…1400 A Class L fuse • 42 w/800…1200 A CB
21G…C910	LD	560	100	These options are not used with these drive ratings.		
	ND	500	100			
	HD	400	100			
21G…C1K0	LD	630	100			
	ND	560	100			
	HD	500	100			
21G…C1K1	LD	710	100			
	ND	630	100			
	HD	500	100			
21G…C1K2	LD	800	100			
	ND	710	100			
	HD	560	100			
21G…C1K4	LD	850	100			
	ND	800	100			
	HD	630	100			
21G…C1K5	LD	900	100			
	ND	850	100			
	HD	710	100			

(1) These circuit breakers are considered branch circuit protection for the unit.

(2) No additional protection is provided with the P5 molded case switch option. Branch circuit protection is required based on NEC guidelines.

Table 32 - Short Circuit Current Ratings – 480V AC Input

Drive Cat. No.	Duty Cycle	Hp	Short Circuit Current Rating (kA)			
			Circuit Breaker Only (P3) (1)	Circuit Breaker with Input Contactor (P3 with P11) (1)	Molded Case Switch Only (P5) (2)	Molded Case Switch with Input Contactor (P5 with P11) (2)
21G…D430	LD	400	100	30 or • 65 w/600 A Class J fuse	65	5 or • 65 w/600 A Class J fuse • 30 w/600…1000 A Class L fuse • 30 w/600…1200 A CB
	ND	350	100	30 or • 65 w/550…600 A Class J fuse	65	30 or • 65 w/550…600 A Class J fuse
	HD	300	100	5 or • 100 w/450…600 A Class J fuse • 18 w/600…800 A Class L fuse • 18 w/500 A CB	65	5 or • 100 w/500…600 A Class J fuse • 18 w/600…800 A Class L fuse • 18 w/500 A CB
21G…D485	LD	450	100	30	65 or • 100 w/800 A Class L fuse	5 or • 30 w/650…1200 A Class L fuse • 30 w/700…1200 A CB
	ND	400	100	30 or • 65 w/600 A Class J fuse	65	5 or • 65 w/600 A Class J fuse • 30 w/600…1000 A Class L fuse • 30 w/600…1200 A CB
	HD	350	100	5 or • 100 w/500…600 A Class J fuse • 18 w/600…900 A Class L fuse	65	5 or • 100 w/500…600 A Class J fuse • 18 w/600…900 A Class L fuse

Table 32 - Short Circuit Current Ratings – 480V AC Input (Continued)

Drive Cat. No.	Duty Cycle	Hp	Short Circuit Current Rating (kA)			
			Circuit Breaker Only (P3)[1]	Circuit Breaker with Input Contactor (P3 with P11)[1]	Molded Case Switch Only (P5)[2]	Molded Case Switch with Input Contactor (P5 with P11)[2]
21G…D545	LD	500	100	30	65 or • 100 w/800 A Class L fuse	5 or • 30 w/700…1300 A Class L fuse • 30 w/700…1200 A CB
	ND	450	100	30	65 or • 100 w/650…800 A Class L fuse	5 or • 30 w/650…1200 A Class L fuse • 30 w/700…1200 A CB
	HD	350	100	30 or • 65 w/550…600 A Class J fuse	65	5 or • 65 w/550…600 A Class J fuse • 30 w/600…1000 A Class L fuse • 30 w/600…1200 A CB
21G…D617	LD	600	100	42	65 or • 100 w/850…1200 A Class L fuse	5 or • 42 w/850…1500 A Class L fuse • 42 w/900…1200 A CB
	ND	500	100	30	65 or • 100 w/750…800 A Class L fuse	5 or • 30 w/750…1300 A Class L fuse • 30 w/800…1200 A CB
	HD	400	100	30 or • 65 w/600 A Class J fuse	65	5 or • 65 w/600 A Class J fuse • 30 w/600…1000 A Class L fuse • 30 w/600…1200 A CB
21G…D710	LD	650	100	42	65 or • 100 w/1000…1200 A Class L fuse	5 or • 42 w/1000…1700 A Class L fuse • 42 w/1000…2000 A CB
	ND	600	100	42	65 or • 100 w/850…1200 A Class L fuse	5 or • 42 w/850…1500 A Class L fuse • 42 w/900…1200 A CB
	HD	450	100	30	65 or • 100 w/650…800 A Class L fuse	5 or • 30 w/650…1200 A Class L fuse • 30 w/700…1200 A CB
21G…D740	LD	700	100	42	65 or • 100 w/1000…1200 A Class L fuse	5 or • 42 w/1000…1700 A Class L fuse • 42 w/1000…2000 A CB
	ND	650	100	42	65 or • 100 w/900…1200 A Class L fuse	5 or • 42 w/900…1600 A Class L fuse • 42 w/900…2000 A CB
	HD	500	100	30	65 or • 100 w/750…800 A Class L fuse	5 or • 30 w/750…1300 A Class L fuse • 30 w/800…1200 A CB
21G…D800	LD	800	100	These options are not used with these drive ratings.		
	ND	700	100			
	HD	600	100			
21G…D960	LD	900	100			
	ND	800	100			
	HD	700	100			
21G…D1K0	LD	1000	100			
	ND	900	100			
	HD	750	100			
21G…D1K2	LD	1100	100			
	ND	1000	100			
	HD	800	100			
21G…D1K3	LD	1250	100			
	ND	1100	100			
	HD	900	100			
21G…D1K4	LD	1350	100			
	ND	1250	100			
	HD	1000	100			

(1) These circuit breakers are considered branch circuit protection for the unit.

(2) No additional protection is provided with the P5 molded case switch option. Branch circuit protection is required based on NEC guidelines.

Table 33 - Short Circuit Current Ratings – 600V AC Input

Drive Cat. No.	Duty Cycle	Hp	Short Circuit Current Rating (kA)			
			Circuit Breaker Only (P3) (1)	Circuit Breaker with Input Contactor (P3 with P11) (1)	Molded Case Switch Only (P5) (2)	Molded Case Switch with Input Contactor (P5 with P11) (2)
21G…E295	LD	350	50	• 18 w/601…700 A Class L fuse • 18 w/500 A CB • 100 w/600 A Class J fuse	25	• 25 w/600 A Class J fuse
	ND	300	50	• 18 w/600 A Class L fuse • 18 w/500 A CB • 100 w/600 A Class J fuse	25	• 25 w/600 A Class J fuse
	HD	250	50	• 18 w/600 A Class L fuse • 18 w/500 A CB • 100 w/600 A Class J fuse	25	• 25 w/600 A Class J fuse
21G…E355	LD	400	50	• 18 w/601…800 A Class L fuse • 18 w/500 A CB • 100 w/600 A Class J fuse	25	• 25 w/600 A Class J fuse
	ND	350	50	• 18 w/601…700 A Class L fuse • 18 w/500 A CB • 100 w/600 A Class J fuse	25	• 25 w/600 A Class J fuse
	HD	300	50	• 18 w/600 A Class L fuse • 18 w/500 A CB • 100 w/600 A Class J fuse	25	• 25 w/600 A Class J fuse
21G…E395	LD	450	50	• 30 w/601…900 A Class L fuse • 30 w/1000 A CB	• 100 w/800 A max Class L fuse	• 30 w/800 A Class L fuse
	ND	400	50	• 18 w/601…800 A Class L fuse • 18 w/500 A CB • 100 w/600 A Class J fuse	25	• 25 w/600 A Class J fuse
	HD	350	50	• 18 w/601…700 A Class L fuse • 18 w/500 A CB • 100 w/600 A Class J fuse	25	• 25 w/600 A Class J fuse
21G…E435	LD	500	50	• 30 w/601…1000 A Class L fuse • 30 w/1000 A CB	• 100 w/800 A max Class L fuse	• 30 w/800 A Class L fuse
	ND	450	50	• 30 w/601…900 A Class L fuse • 30 w/1000 A CB	• 100 w/800 A max Class L fuse	• 30 w/800 A Class L fuse
	HD	350	50	• 18 w/601…700 A Class L fuse • 18 w/500 A CB • 100 w/600 A Class J fuse	25	• 25 w/600 A Class J fuse
21G…E460	LD	500	35	• 30 w/601…1000 A Class L fuse • 30 w/1000 A CB	• 100 w/800 A max Class L fuse	• 30 w/800 A Class L fuse
	ND	500	50	• 30 w/601…1000 A Class L fuse • 30 w/1000 A CB	• 100 w/800 A max Class L fuse	• 30 w/800 A Class L fuse
	HD	400	50	• 18 w/601…800 A Class L fuse • 18 w/500 A CB • 100 w/600 A Class J fuse	25	• 25 w/600 A Class J fuse
21G…E510	LD	550	35	• 30 w/601…1100 A Class L fuse • 30 w/1100 A CB	• 100 w/800 A max Class L fuse	• 30 w/800 A Class L fuse
	ND	500	35	• 30 w/601…1000 A Class L fuse • 30 w/1000 A CB	• 100 w/800 A max Class L fuse	• 30 w/800 A Class L fuse
	HD	450	50	• 30 w/601…900 A Class L fuse • 30 w/1000 A CB	• 100 w/800 A max Class L fuse	• 30 w/800 A Class L fuse
21G…E595	LD	700	50	These options are not used with these drive ratings.		
	ND	600	50			
	HD	500	50			
21G…E630	LD	800	50			
	ND	700	50			
	HD	600	50			
21G…E760	LD	900	50			
	ND	800	50			
	HD	700	50			
21G…E825	LD	950	50	These options are not used with these drive ratings.		
	ND	900	50			
	HD	750	50			
21G…E900	LD	1000	65			
	ND	950	50			
	HD	800	50			
21G…E980	LD	1100	65			
	ND	1000	65			
	HD	900	50			

(1) These circuit breakers are considered branch circuit protection for the unit if the tap is within 10 ft. of the breaker input.
(2) These devices are 21G, SCCR ratings with no additional protection provided. Branch circuit protection (fuse) is required based on NEC guidelines for options with P5.

Table 34 - Short Circuit Current Ratings – 690V AC Input

Drive Cat. No.	Duty Cycle	kW	Short Circuit Current Rating (kA)			
			Circuit Breaker Only (P3)	Circuit Breaker with Input Contactor (P3 with P11)	Molded Case Switch Only (P5)	Molded Case Switch with Input Contactor (P5 with P11)
21G…F265	LD	315	30	SCCR rating for 690V input contactor not available at time of publication.	25	SCCR rating for 690V input contactor not available at time of publication.
	ND	250	30		25	
	HD	200	30		25	
21G…F330	LD	355	30		25	
	ND	315	30		25	
	HD	250	30		25	
21G…F370	LD	400	30		25	
	ND	355	30		25	
	HD	300	30		25	
21G…F415	LD	450	30		25	
	ND	400	30		25	
	HD	355	30		25	
21G…F460	LD	500	25		25	
	ND	450	30		25	
	HD	375	30		25	
21G…F500	LD	530	25		25	
	ND	500	25		25	
	HD	400	30		25	
21G…F590	LD	630	35	These options are not used with these drive ratings.		
	ND	560	35			
	HD	450	35			
21G…F650	LD	710	35			
	ND	630	35			
	HD	500	35			
21G…F710	LD	800	35			
	ND	710	35			
	HD	560	35			
21G…F765	LD	850	35			
	ND	750	35			
	HD	630	35			
21G…F795	LD	900	35			
	ND	800	35			
	HD	710	35			
21G…F960	LD	1000	35			
	ND	900	35			
	HD	800	35			

Input Contactor Precautions

ATTENTION: A contactor or other device that routinely disconnects and reapplies the AC line to the drive to start and stop the motor can damage the drive hardware. The drive is designed to use control input signals that start and stop the motor. If an input device is used, operation must not exceed 1 cycle per minute or drive damage can occur.

ATTENTION: The drive start/stop/enable control circuitry includes solid-state components. If hazards due to accidental contact with moving machinery or unintentional flow of liquid, gas or solids exist, an additional hardwired stop circuit can be required to remove the AC line to the drive. An auxiliary braking method can be required.

Output Contactor Precaution

ATTENTION: To guard against drive damage when using output contactors, the following information must be read and understood. One or more output contactors can be installed between the drive and motors for disconnecting or isolating certain motors/loads. If a contactor is opened while the drive is operating, power is removed from the respective motor, but the drive continues to produce voltage at the output terminals. In addition, reconnecting a motor to an active drive (by closing the contactor) can produce excessive current that can cause the drive to fault. If any of these conditions are determined to be undesirable or unsafe, an auxiliary contact on the output contactor can be wired to a drive digital input that is programmed as "Enable." This configuration causes the drive to execute a coast-to-stop (cease output) whenever an output contactor is opened.

Bypass Contactor Precaution

ATTENTION: An incorrectly applied or installed bypass system can result in component damage or reduction in product life. The most common causes are:

- Wiring AC line to drive output or control terminals.
- Improper bypass or output circuits that are not approved by Rockwell Automation.
- Output circuits that do not connect directly to the motor.

Contact Rockwell Automation for assistance with application or wiring.

Applying and Removing Power

IMPORTANT Wait 1 minute before cycling power disconnect switches. This requirement applies to both Off-to-On and On-to-Off transitions. Rapid switch cycling can result in equipment damage.

Drives with Cabinet Options

This section provides descriptions of the available cabinet options.

Power Disconnects

There are two cabinet options for power disconnects.

Option	Code	Applicable Frame	Description
Input Thermal Magnetic Circuit Breaker	P3	8…10	This option is for disconnecting drive power. All breakers include flange-style handle operators with interlocking doors that can use padlocks.
Input Non-Fused Molded Case Disconnect Switch	P5	8 Only	This option is for disconnecting drive power. All switches include flange-style handle operators with interlocking doors that can use padlocks.

Contactors

There are two cabinet options for contactors.

Option	Code	Applicable Frame	Description
Input Contactor	P11	8 Only	An input contactor is provided. The contactor is controlled by customer supplied 120V AC (480V and 600V input drives) or 230V AC (400V and 690V input drives) remote contact closure logic or by the X1 option if present. A terminal block for control is provided for customer use, and is wired to 1 N.O. and 1 N.C. auxiliary contact on the contactor. **IMPORTANT:** The P11 option "Alternate Contact Circuit" is not intended to be used as a Start/Stop circuit.
Output Contactor	P12	8 Only	A contactor is provided between the drive output and the motor. The contactor is controlled by customer supplied 120V AC (480V and 600V input drives) or 230V AC (400V and 690V input drives) remote contact closure logic or by the X1 option if present. A terminal block for control is provided for customer use and is wired to 1 N.O. and 1 N.C. auxiliary contact on the contactor.

Reactors

There are four cabinet options for reactors.

Option	Code	Applicable Frame	Description
3% Input Reactor	L1	8 and 9	Provides a 3% open core drive input line reactor that mounts inside the Cabinet Options Bay.
3% Output Reactor	L2	8 and 9	Provides a 3% open core drive output load reactor that mounts inside the Cabinet Options Bay.
5% Input Reactor	L3	8 Only	Provides a 5% open core drive input line reactor that mounts inside the Cabinet Options Bay.
5% Output Reactor	L4	8 Only	Provides a 5% open core drive output load reactor that mounts inside the Cabinet Options Bay.

Terminal Blocks and Other Cabinet Parts

There are cabinet options for terminal block and thermostat control.

Option	Code	Applicable Frame	Description
Control Terminal Block	–	8 and 9	Provides contact for field wired hardware enable circuit (see page 265 for more detail) and contactor control if ordered without the X1 option. Frame 8 drives with cabinet options ship with a hardware enable jumper on TB4. This jumper can be removed and replaced with field wiring for hardware enable.
Thermostat	–	8 and 9	Monitors cabinet options bay for temperature and wired to drive hardware enable input. Disables the system when over temperature is detected to help protect cabinet option components. **IMPORTANT**: A ventilation fan failure in the cabinet options bay does disable the drive unless an over temperature is detected by the thermostat.

Transformer Panel

There are cabinet options for fuses and thermostat.

Option	Code	Applicable Frame	Description	
Fuses	–	8 (only IP54 enclosures) 9 (all enclosures)	FU9, FU10 (690V AC) FU9, FU10 (400, 480, 600V AC) FU11 FU12 (120V AC) FU12 (230V AC) FU13 (Frame 8 with P11 or P12 Only)	690V AC, 6 A, IEC gl-gG 600V AC, 6 A, Class CC 600V AC, 5 A, Class CC 600V AC, 6 A, Class CC 600V AC, 3 A, Class CC 600V AC, 5 A, Class CC
Thermostat	–	8 and 9	Thermostat is used in all option bays and enclosure types.	

Power Wiring Schematic

This figure shows the power wiring.

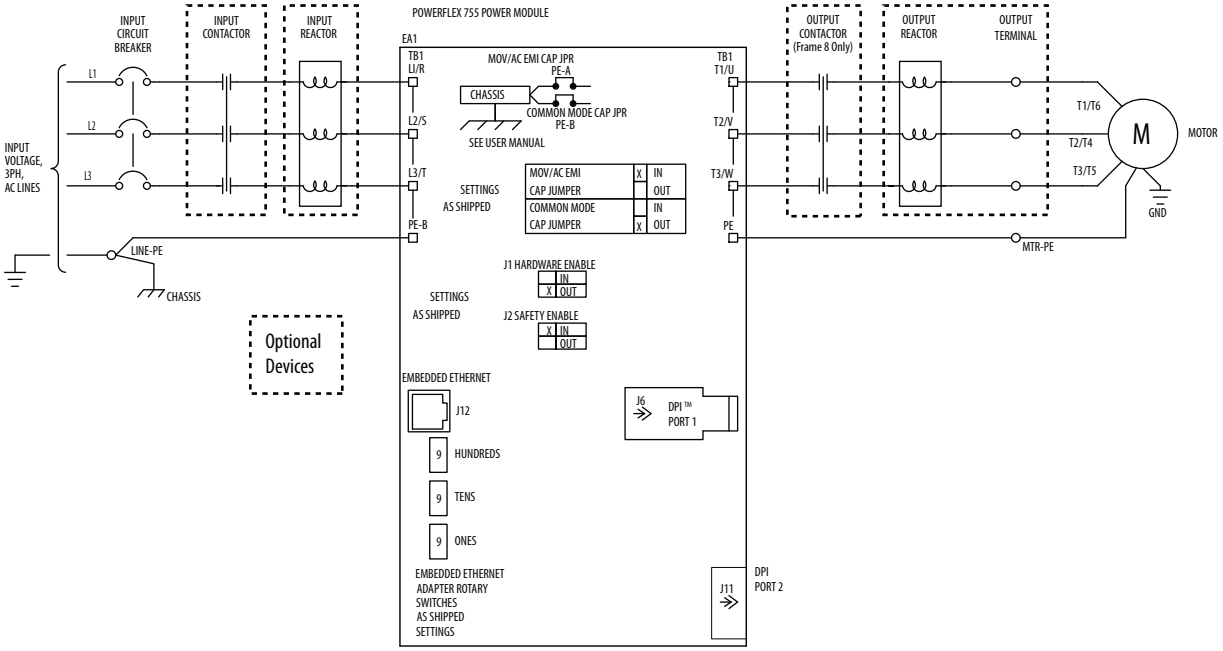

Input Power Circuit Breakers and Disconnect Switches

See page 23 for an explanation of where to locate drive ratings on the nameplate.

Table 35 - 400V, 50 Hz Input – Code P3 Thermal Magnetic Circuit Breaker Options

kW	Amps	Duty	Line Side Terminal Lugs	Terminal Size	Recommended Torque N•m (lb•in)
200	385	Heavy	140G-M-TLA23	(2) 250…500 MCM kit of 3	31 (274)
250	460	Normal			
	456	Heavy			
	472	Heavy			
315	540	Light	140G-N-TLA43	(4) 4/0…500 MCM	43 (381)
	540	Normal			
	540	Heavy			
315	585	Light			
	567	Normal			
	585	Heavy			
355	612	Light			
	650	Normal			
	642	Heavy			
400	750	Light			
	750	Normal			
	770	Normal			
450	796	Light			
	832	Light			

Table 36 - 400V, 50 Hz Input – Code P5 Molded Case Disconnect Switch Options (only floor mount Frame 8)

kW	Amps	Duty	Line Side Terminal Lugs	Terminal Size	Recommended Torque N•m (lb•in)
200	385	Heavy	140G-M-TLA23	(2) 250…500 MCM kit of 3	31 (274)
250	460	Normal			
	456	Heavy			
	472	Heavy			
315	540	Light			
	540	Normal			
	540	Heavy			
315	585	Light			
	567	Normal			
	585	Heavy			
355	612	Light			
	650	Normal			
	642	Heavy			
400	750	Light	140G-N-TLA43	(4) 4/0…500 MCM	43 (381)
	750	Normal			
	770	Normal			
450	796	Light			
	832	Light			

Table 37 - 480V, 60 Hz Input – Code P3 Thermal Magnetic Circuit Breaker Options

Hp	Amps	Duty	Line Side Terminal Lugs	Terminal Size	Recommended Torque N•m (lb•in)
300	370	Heavy	140G-M-TLA23	(2) 250…500 MCM kit of 3	31 (274)
350	430	Normal			
	414	Heavy			
	454	Heavy			
400	485	Light	140G-N-TLA43	(4) 4/0…500 MCM	43 (381)
	485	Normal			
	485	Heavy			
450	545	Light			
	545	Normal			
	545	Heavy			
500	590	Light			
	617	Normal			
	617	Heavy			
600	710	Light			
	710	Normal			
650	765	Light			
	740	Normal			
700	800	Light			

Table 38 - 480V, 60 Hz Input – Code P5 Molded Case Disconnect Switch Options (only floor mount Frame 8)

Hp	Amps	Duty	Line Side Terminal Lugs	Terminal Size	Recommended Torque N•m (lb•in)
300	370	Heavy	140G-M-TLA23	(2) 250…500 MCM kit of 3	31 (274)
350	430	Normal			
	414	Heavy			
	454	Heavy			
400	485	Light			
	485	Normal			
	485	Heavy			
450	545	Light			
	545	Normal			
	545	Heavy			
500	590	Light			
	617	Normal			
	617	Heavy			
600	710	Light	140G-N-TLA43	(4) 4/0…500 MCM	43 (381)
	710	Normal			
650	765	Light			
	740	Normal			
700	800	Light			

Table 39 - 600V, 50 Hz Input – Code P3 Thermal Magnetic Circuit Breaker Options

Hp	Amps	Duty	Line Side Terminal Lugs	Terminal Size	Recommended Torque N•m (lb•in)
250	272	Heavy	140G-M-TLA23	(2) 250…500 MCM kit of 3	31 (274)
300	295	Heavy			
	295	Normal			
350	329	Heavy			
	355	Heavy			
	355	Light			
	355	Normal			
400	395	Heavy			
	395	Light			
	395	Normal			
450	425	Heavy			
	435	Light			
	435	Normal			
500	460	Light			
	460	Normal			
	510	Light			
	510	Normal			
550	545	Light			

Table 40 - 600V, 50 Hz Input – Code P5 Molded Case Disconnect Switch Options (only floor mount Frame 8)

Hp	Amps	Duty	Line Side Terminal Lugs	Terminal Size	Recommended Torque N•m (lb•in)
250	272	Heavy	140G-M-TLA23	(2) 250…500 MCM kit of 3	31 (274)
300	295	Heavy			
	295	Normal			
350	329	Heavy			
	355	Heavy			
	355	Light			
	355	Normal			
400	395	Heavy			
	395	Light			
	395	Normal			
450	425	Heavy			
	435	Light			
	435	Normal			
500	460	Light			
	460	Normal			
	510	Light			
	510	Normal			
550	545	Light			

Table 41 - 690V, 60 Hz Input – Code P3 Thermal Magnetic Circuit Breaker Options

kW	Amps	Duty	Line Side Terminal Lugs	Terminal Size	Recommended Torque N•m (lb•in)
200	215	Heavy	140G-M-TLA23	(2) 250…500 MCM kit of 3	31 (274)
250	265	Heavy			
	265	Normal			
300	308	Heavy			
315	330	Light			
	330	Normal			
355	370	Heavy			
	370	Light			
	370	Normal			
375	375	Heavy			
400	410	Light			
	413	Heavy			
	415	Normal			
450	460	Light			
	460	Normal			
500	500	Light			
	500	Normal			
530	530	Light			

Table 42 - 690V, 60 Hz Input – Code P5 Molded Case Disconnect Switch Options (only floor mount Frame 8)

kW	Amps	Duty	Line Side Terminal Lugs	Terminal Size	Recommended Torque N•m (lb•in)
200	215	Heavy	140G-M-TLA23	(2) 250…500 MCM kit of 3	31 (274)
250	265	Heavy			
	265	Normal			
300	308	Heavy			
315	330	Light			
	330	Light			
355	370	Heavy			
	370	Light			
	370	Normal			
375	375	Heavy			
400	410	Light			
	413	Heavy			
	415	Normal			
450	460	Light			
	460	Normal			
500	500	Light			
	500	Normal			
530	530	Light			

Cabinet Options Bay Accessories

This section describes the cabinet options bay accessories.

Figure 109 - Accessory Overview

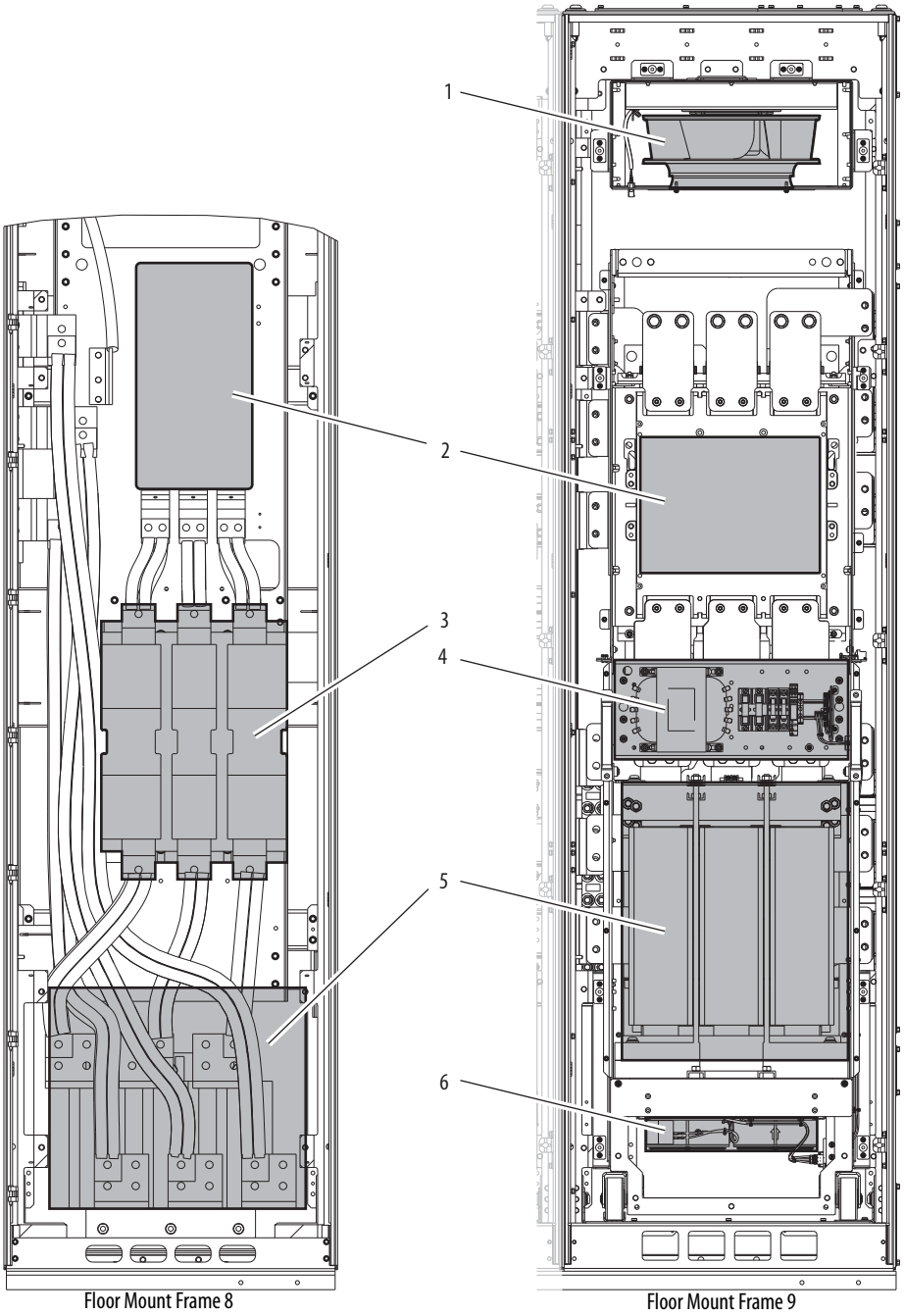

No.	Description	Floor Mount Drive Frame Size
1	Outlet blower (Frame 9)	9
2	Circuit breaker/molded case switch	8, 9
3	Input or output contactor (optional)	8
4	Transformer panel	9
5	Input or output reactor (optional)	8, 9
6	Reactor fan tray (included with reactor)	9

Figure 110 - Option P3 or P5 Disconnect

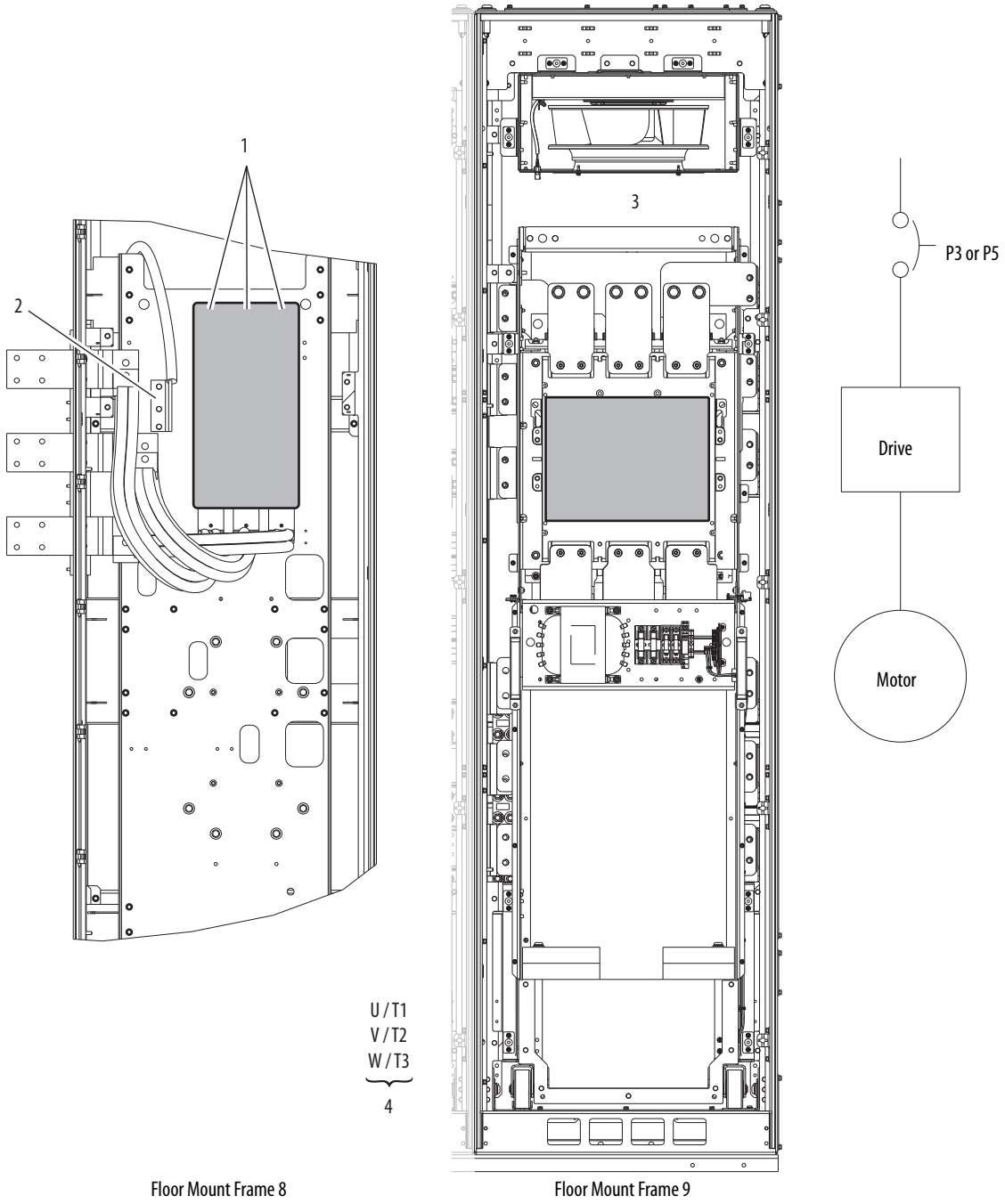

No.	Name	Description
1	R/L1, S/L2, T/L3	Three-phase input power connection.
2	PE	Three-phase input ground.
3	R/L1, S/L2, T/L3	Three-phase input power for frame 9 drives lands on the horizontal bus bars behind the cabinet options rollout assembly. See page 172 and page 173.
4	U/T1, V/T2, W/T3	Motor connection that is made at drive power bus. See page 164.

Figure 111 - Option P3 or P5 Disconnect and Option P11 Input Contactor (only floor mount Frame 8)

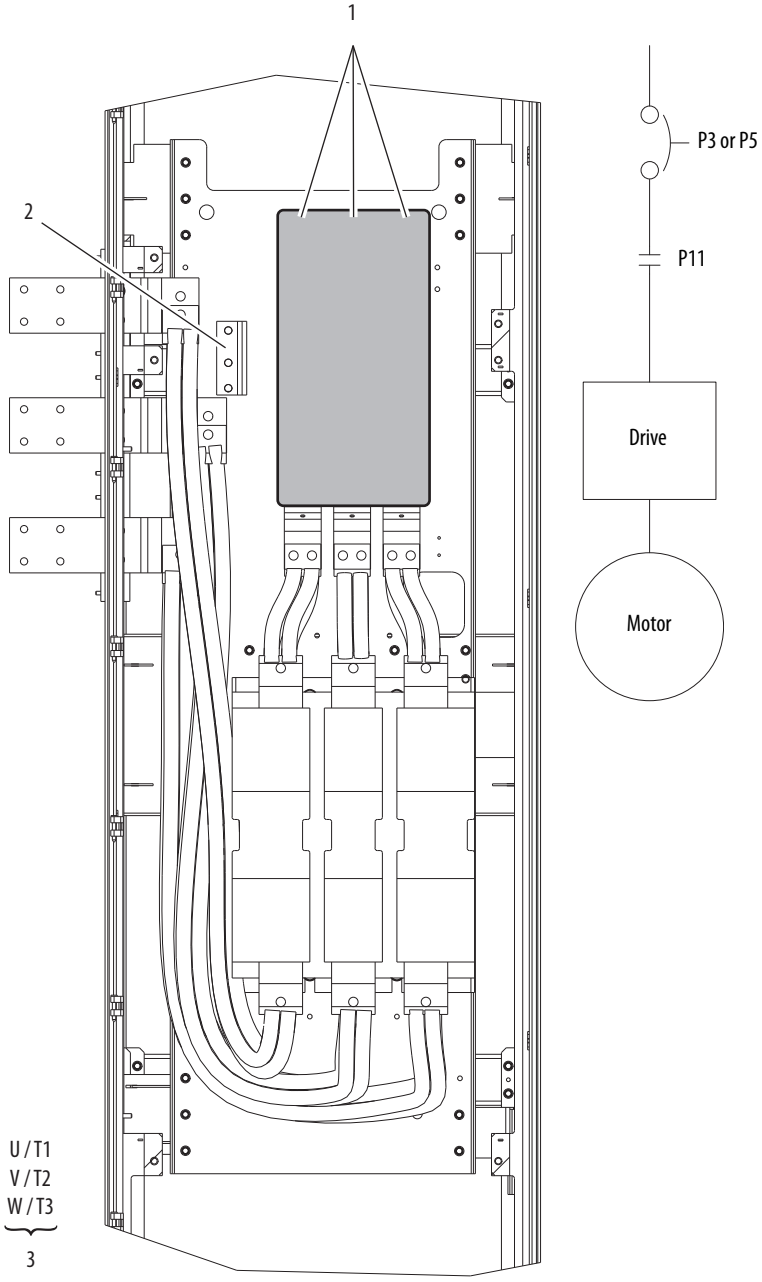

No.	Name	Description
1	R/L1, S/L2, T/L3	Three-phase input power connection.
2	PE	Three-phase input ground.
3	U/T1, V/T2, W/T3	Motor connection that is made at drive power bus. See page 164.

Figure 112 - Option P3 or P5 Disconnect, Option P11 Input Contactor, and Option L1 or L3 Input Reactor (only floor mount Frame 8)

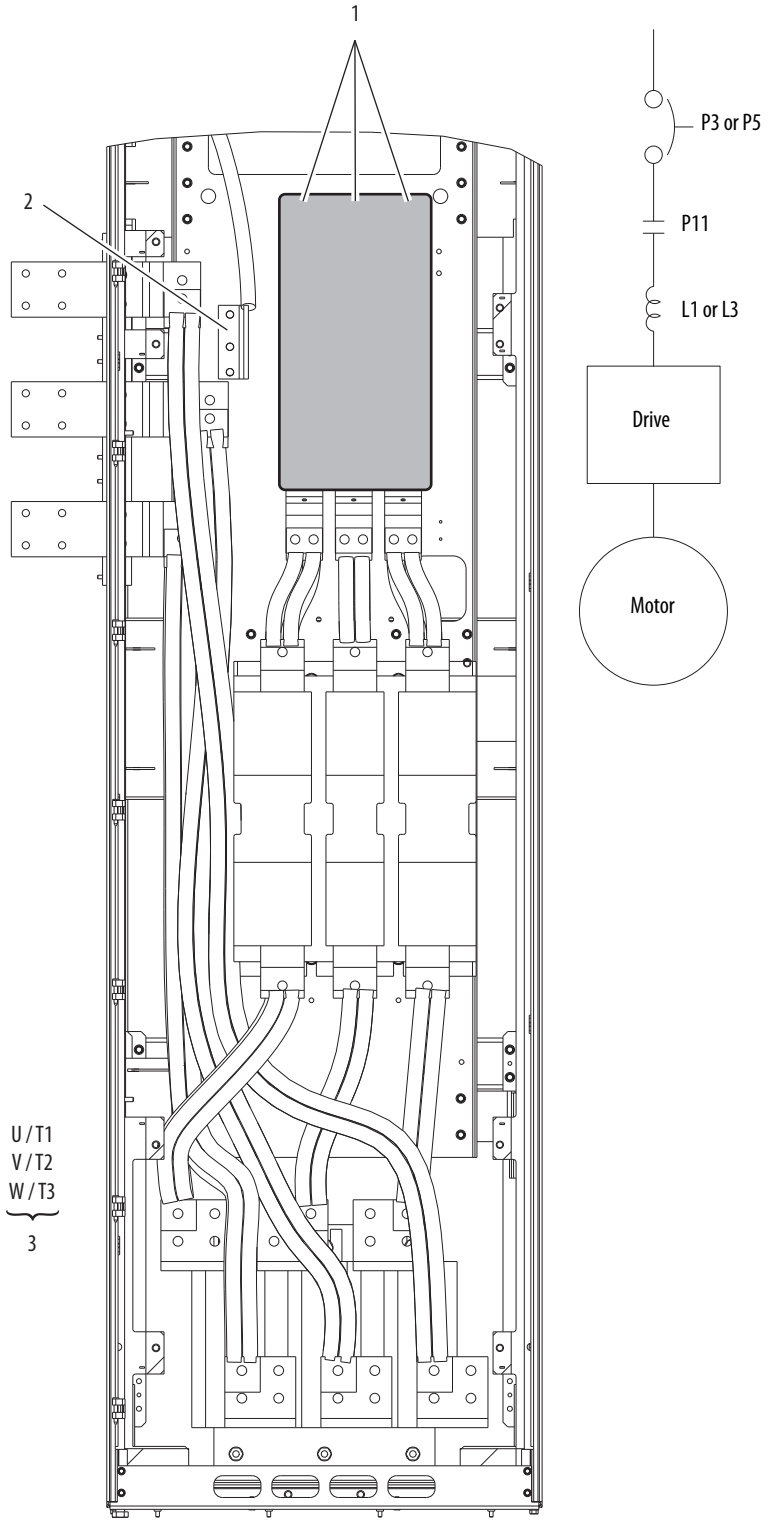

No.	Name	Description
1	R/L1, S/L2, T/L3	Three-phase input power connection.
2	PE	Three-phase input ground.
3	U/T1, V/T2, W/T3	Motor connection that is made at drive power bus. See page 164.

Figure 113 - Option P3 or P5 Disconnect, Option P11 Input Contactor, and Option L2 or L4 Output Reactor (only floor mount Frame 8)

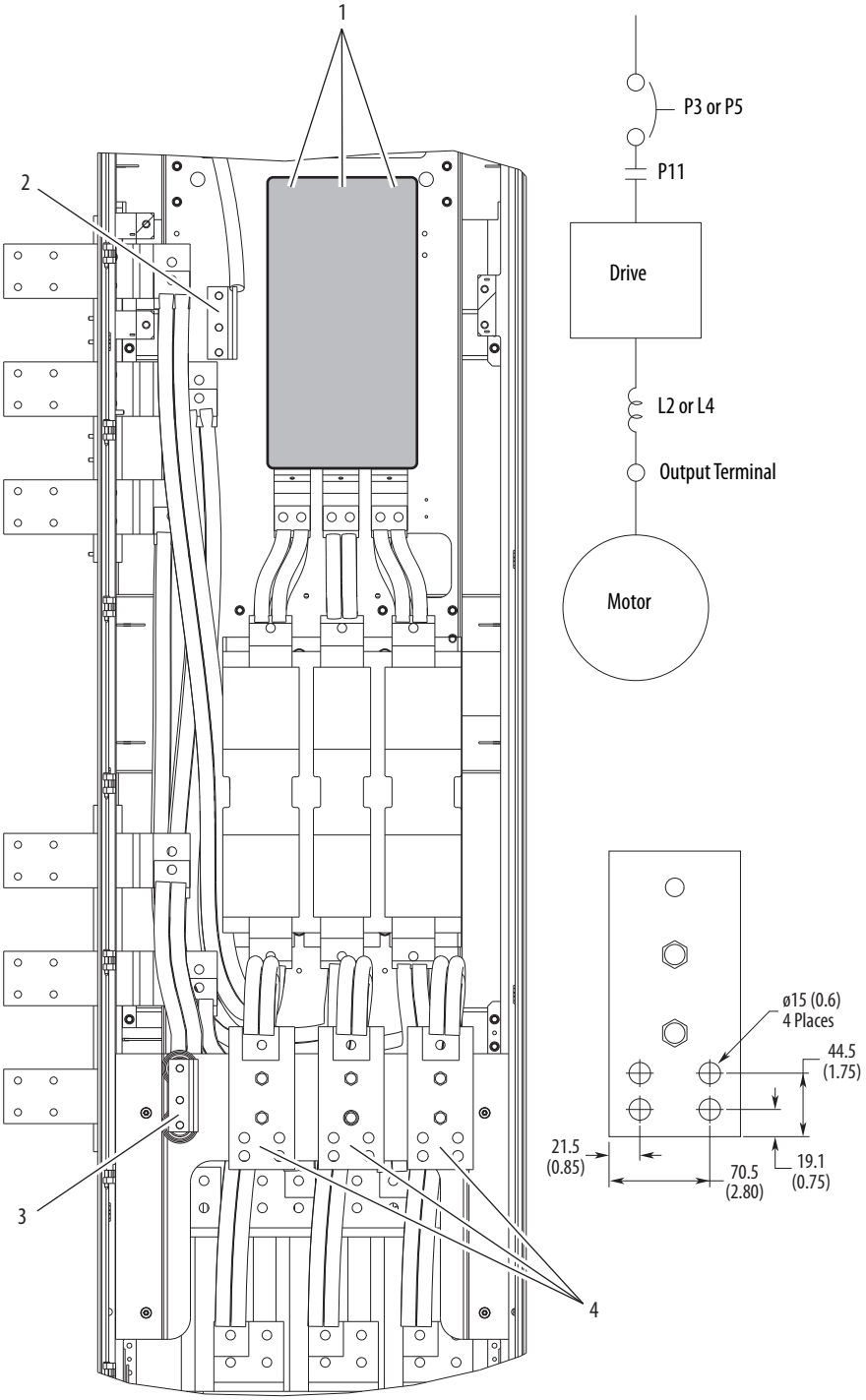

No.	Name	Description	Recommended Torque N•m (lb•in)
1	R/L1, S/L2, T/L3	Three-phase input power connection.	Factory installed
2	PE	Three-phase input ground.	38.0 (336)
3	PE	Three-phase motor ground.	
4	U/T1, V/T2, W/T3	Motor connection.	

Figure 114 - Option P3 or P5 Disconnect, Option P12 Output Contactor, and Option L2 or L4 Output Reactor (only floor mount Frame 8)

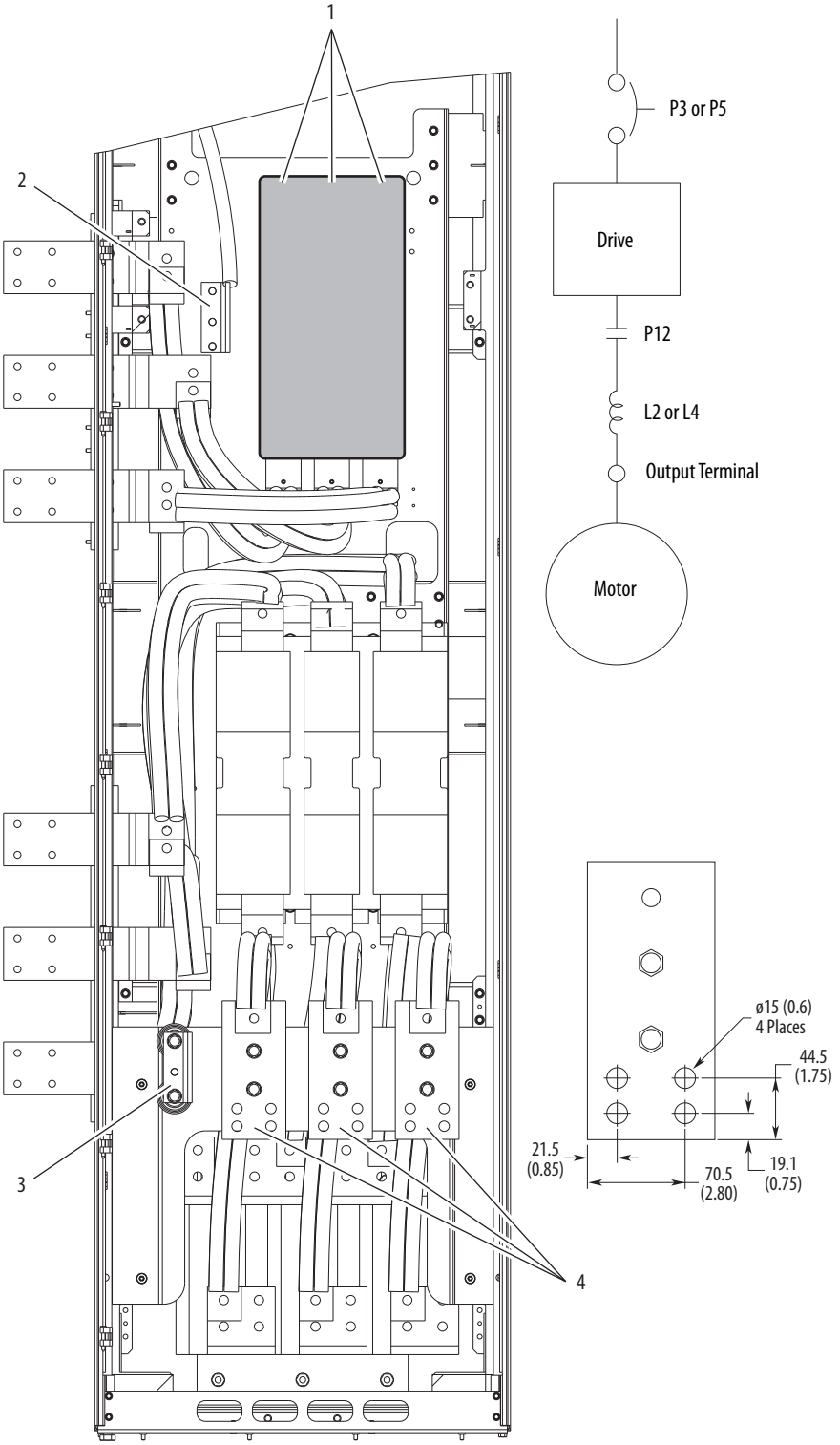

No.	Name	Description	Recommended Torque, N•m (lb•in)
1	R/L1, S/L2, T/L3	Three-phase input power connection.	Factory installed
2	PE	Three-phase input ground.	38.0 (336)
3	PE	Three-phase motor ground.	
4	U/T1, V/T2, W/T3	Motor connection.	

Figure 115 - Option P3 or P5 Disconnect and Option L1 or L3 Input Reactor

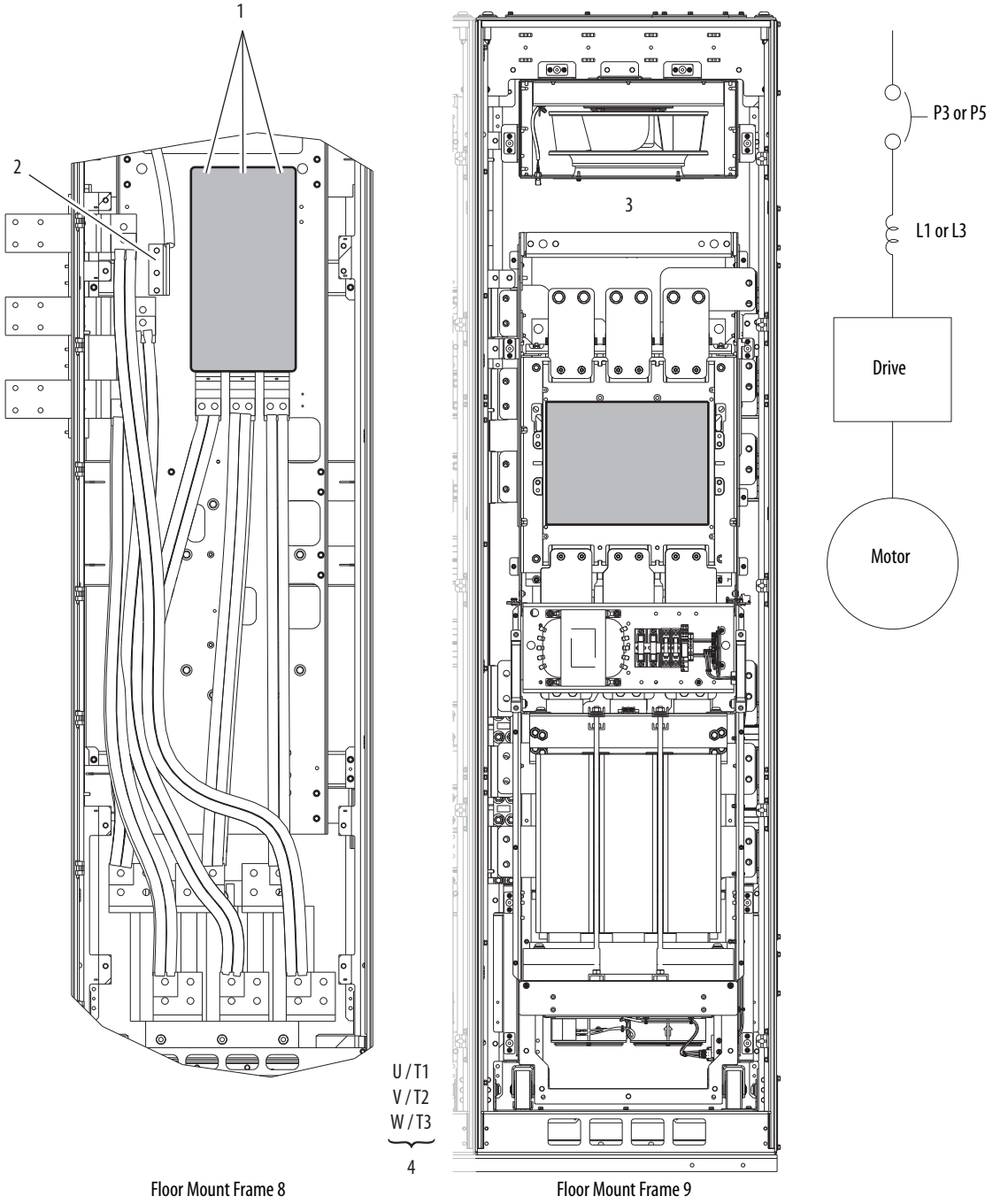

No.	Name	Description
1	R/L1, S/L2, T/L3	Three-phase input power connection.
2	PE	Three-phase input ground.
3	R/L1, S/L2, T/L3	Three-phase input power for frame 9 drives lands on the horizontal bus bars behind the cabinet options rollout assembly. See page 172 and page 173.
4	U/T1, V/T2, W/T3	Motor connection that is made at drive power bus. See page 164.

Figure 116 - Option P3 or P5 Disconnect and Option L2 or L4 Output Reactor

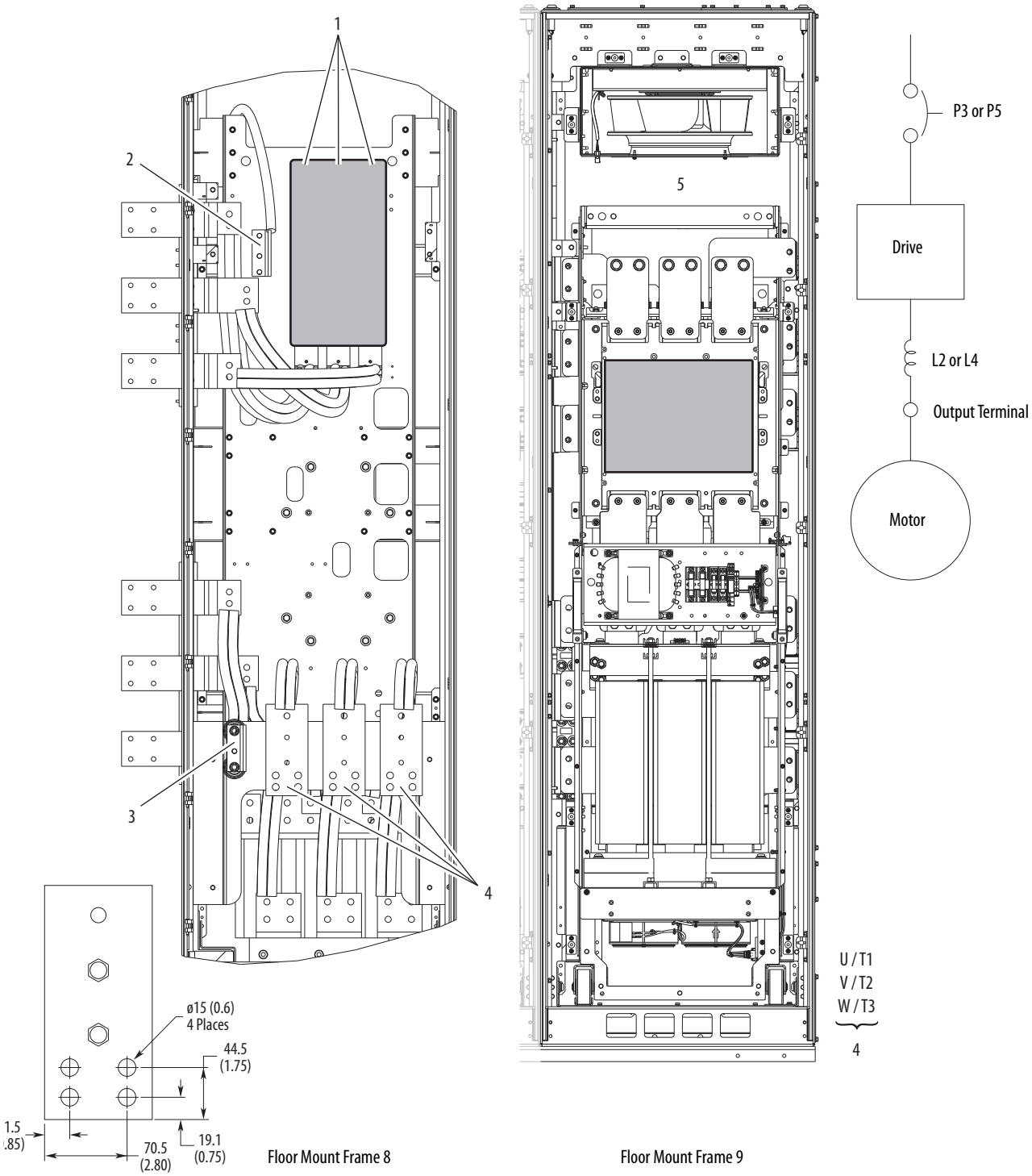

No.	Name	Description	Recommended Torque, N•m (lb•in)
1	R/L1, S/L2, T/L3	Three-phase input power connection.	Factory installed
2	PE	Three-phase input ground.	38.0 (336)
3	PE	Three-phase motor ground.	
4	U/T1, V/T2, W/T3	Motor connection.	
5	R/L1, S/L2, T/L3	Three-phase input power for frame 9 drives lands on the horizontal bus bars behind the cabinet options rollout assembly. See page 172 and page 173.	

Figure 117 - Option P3 or P5 Disconnect and Option P12 Output Contactor (only floor mount Frame 8)

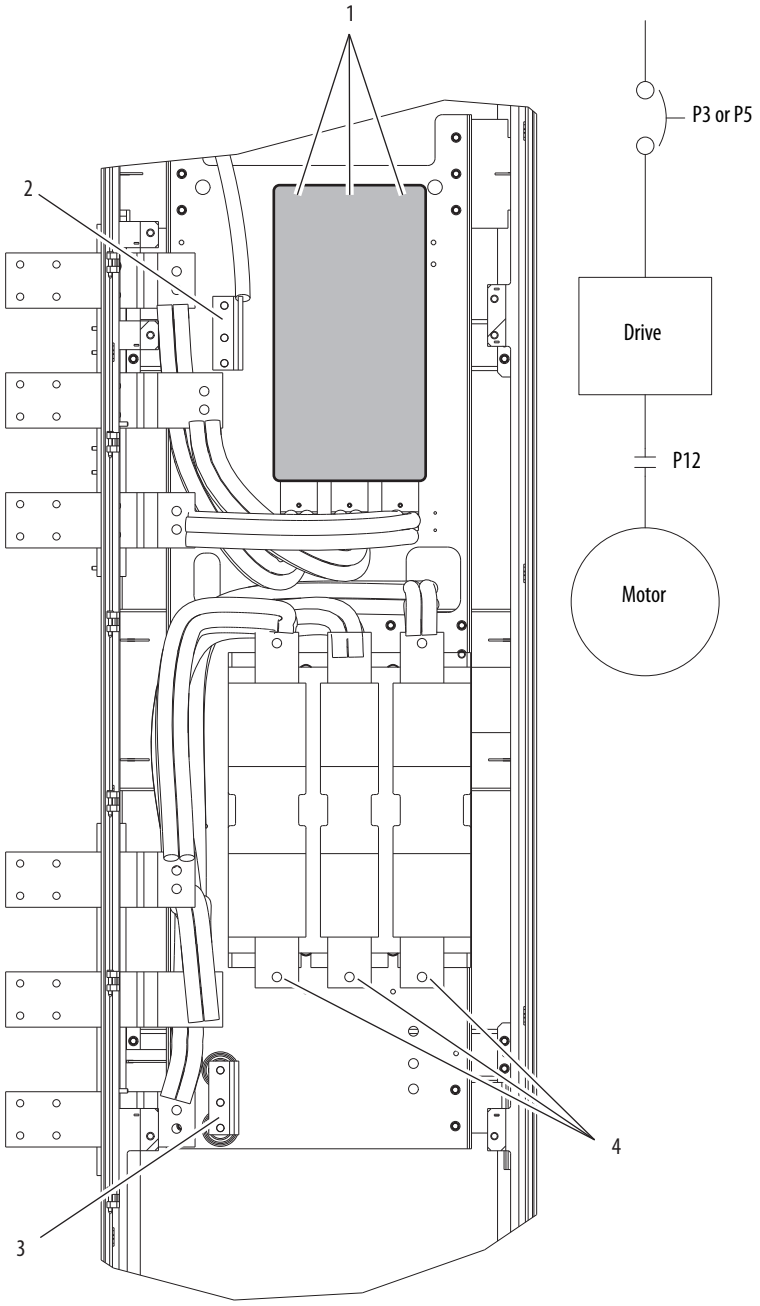

No.	Name	Description
1	R/L1, S/L2, T/L3	Three-phase input power connection.
2	PE	Three-phase input ground.
3	PE	Three-phase motor ground.
4	U/T1, V/T2, W/T3	Motor connection.

Table 43 - 400V, 50 Hz Input – Code P12 Output Contactor Options (only floor mount Frame 8)

kW	Amps	Duty	Contactor Cat. No.	Recommended Torque N•m (lb•in)
200	385	Heavy	100-D420EA11	17 (150)
250	460	Normal	100-D630EA11	68 (600)
	456	Heavy		
	472	Heavy		
315	540	Light		
	540	Normal	100-D860EA11	
	540	Heavy	100-D630EA11	
315	585	Light		
	567	Normal		
	585	Heavy		
355	612	Light		
	650	Normal	100-D860EA11	
	642	Heavy	100-D630EA11	
400	750	Light	100-D860EA11	
	750	Normal		
	770	Normal		
450	796	Light		
	832	Light		

Table 44 - 480V, 60 Hz Input – Code P12 Output Contactor Options (only floor mount Frame 8)

kW	Amps	Duty	Contactor Cat. No.	Recommended Torque N•m (lb•in)
300	370	Heavy	100-D420ED11	17 (150)
350	430	Normal	100-D630ED11	68 (600)
	414	Heavy	100-D420ED11	17 (150)
	454	Heavy	100-D630ED11	68 (600)
400	485	Light		
	485	Normal		
	485	Heavy		
450	545	Light		
	545	Normal		
	545	Heavy		
500	590	Light		
	617	Normal		
	617	Heavy		
600	710	Light	100-D860ED11	
	710	Normal		
650	765	Light	100-G1200KD12	60 (528)
	740	Normal		
700	800	Light		

Table 45 - 600V, 50 Hz Input – Code P12 Output Contactor Options (only floor mount Frame 8)

Hp	Amps	Duty	Contactor Cat. No.	Recommended Torque N•m (lb•in)
250	272	Heavy	100-D420ED11	17 (150)
300	295	Heavy		
	295	Normal		
350	329	Heavy		
	355	Heavy		
	355	Light		
	355	Normal		
400	395	Heavy		
	395	Light		
	395	Normal		
450	425	Heavy	100-D630ED11	68 (600)
	435	Light		
	435	Normal		
500	460	Light		
	460	Normal		
	510	Light		
	510	Normal		
550	545	Light		

Table 46 - 690V, 60 Hz Input – Code P12 Output Contactor Options (only floor mount Frame 8)

kW	Amps	Duty	Contactor Cat. No.	Recommended Torque N•m (lb•in)
200	215	Heavy	100-D420EA11	17 (150)
250	265	Heavy		
	265	Normal		
300	308	Heavy		
315	330	Light		
	330	Normal		
355	370	Heavy		
	370	Light		
	370	Normal		
375	375	Heavy		
400	410	Light		
	413	Heavy		
	415	Normal		
450	460	Light	100-D630EA11	68 (600)
	460	Normal		
500	500	Light		
	500	Normal		
530	530	Light		

Drive Power Jumper Configuration

PowerFlex 750-Series drives contain protective MOVs and common mode capacitors that are referenced to ground. To guard against drive damage and/or operation problems, these devices must be properly configured according to Table 49.

MOV, AC EMI Capacitor, and Common Mode Capacitor Circuits

Figure 118 - MOV and AC EMI Capacitor Phase to Ground (Wall Mount Frames 1…7)

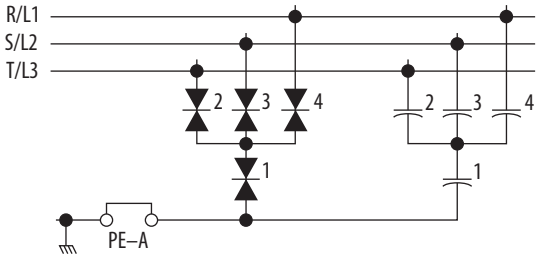

Figure 119 - MOV and AC EMI Capacitor Phase to Ground (Floor Mount Frames 8…10) AC Input Only

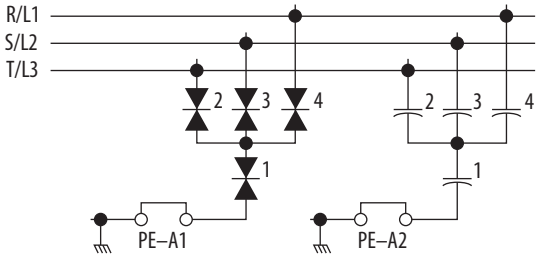

Figure 120 - Common Mode Capacitors to Ground (All Frames)

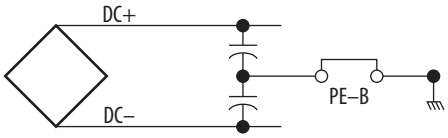

ATTENTION: To avoid an electric shock hazard, verify that the voltage on the bus capacitors has discharged completely before servicing.

Frames 1…7: Measure the DC bus voltage at the power terminal block by measuring between the +DC and -DC terminals (see Figure 95 and Figure 14 for location) or between the +DC and -DC test point sockets if equipped. Also measure between the +DC terminal or test point and the chassis, and between the -DC terminal or testpoint and the chassis. The voltage must be zero for all three measurements.

Frames 8…10: Measure the DC bus voltage at the DC+ and DC- TESTPOINT sockets on the front of the power module (see Figure 98 for location).

Wall Mount Frames 1…7

IMPORTANT PowerFlex 750-Series drives, Frames 1…7, leave the factory with jumpers PE-A and PE-B in the "connected" position. Reconfigure these jumpers based on the power source type available.

Table 47 - Power Jumper Default Configurations

Cat. No. Position 11	Jumper PE-A (MOV/Input filter caps)	Jumper PE-B (DC bus common mode caps)
A	Connected	Disconnected
J	Connected	Connected

Floor Mount Frames 8…10

IMPORTANT PowerFlex 750-Series drives, Frames 8…10, leave the factory with jumpers PE-A1, PE-A2, and PE-B in the "connected" position. Reconfigure these jumpers based on the power source type available.

Table 48 - Power Jumper Default Configurations

Cat. No. Position 11	Jumper PE-A1 (MOV)	Jumper PE-A2 (input filter caps)	Jumper PE-B (DC bus common mode caps)
A	Connected	Connected	Disconnected
J	Connected	Connected	Connected

ATTENTION: Risk of equipment damage exists. The drive power source type must be accurately determined. Jumpers PE-A, PE-A1, PE-A2, and PE-B must be configured for the power source type according to the recommendations in Table 49.

Table 49 - Recommended Power Jumper Configurations Wall Mount Frames 1…7

Power Source Type	Jumper PE-A (2) (3) (MOV/input filter caps)	Jumper PE-B(4) (DC bus common mode caps)	Benefits Of Correct Configuration on Power Source Type
Non-Solid Ground(1) • AC fed ungrounded • Impedance grounded • B phase ground • DC fed from an active converter	Disconnected	Disconnected	Helps avoid severe equipment damage when ground fault occurs
Solid Ground • AC fed solidly grounded • DC fed from passive rectifier that has a solidly grounded AC source	Connected	Connected	• UL compliance • Reduced electrical noise • Most stable operation • EMC compliance • Reduced voltage stress on components and motor bearings

(1) Frame 1 drives must only be installed with a solidly center grounded supply system.
(2) When MOVs are disconnected, the power system must have its own transient protection to confirm known and controlled voltages.
(3) Frame 5…7 common DC input drives do not have the PE-A jumper.
(4) Anytime the PE-B is disconnected, we recommend you set parameter 40 [Mtr Options Cfg] bit 13 'Common Mode' to 1, and parameter 41 [Common Mode Type] to 1 'CMI'.

Table 50 - Recommended Power Jumper Configurations Floor Mount Frames 8…10

Power Source Type	Jumper PE-A1 (1) (MOV)	Jumper PE-A2 (Input Filter Caps)	Jumper PE-B (2) (DC bus common mode caps)	Benefits Of Correct Configuration on Power Source Type
Non-Solid Ground • AC fed ungrounded • Impedance grounded • B phase ground • DC fed from an active converter	Disconnected	Disconnected	Disconnected	Helps avoid severe equipment damage when ground fault occurs
Solid Ground • AC fed solidly grounded • DC fed from passive rectifier that has a solidly grounded AC source	Connected	Connected	Connected	• UL compliance • Reduced electrical noise • Most stable operation • EMC compliance • Reduced voltage stress on components and motor bearings

(1) When MOVs are disconnected, the power system must have its own transient protection to confirm known and controlled voltages.

(2) Important: To meet conducted emission and UL requirements, land the incoming power ground on the left ground stud, and the motor ground on the right ground stud.

To connect or disconnect these devices, see the jumper locations that are shown in the figures on pages Figure 122 on page 222 through Figure 126 on page 226.

In addition, on an ungrounded distribution system where the line-to-ground voltages on any phase could exceed 125% of the nominal line-to-line voltage, an isolation transformer should be installed. See Wiring and Grounding Guidelines for Pulse-width Modulated (PWM) AC Drives, publication DRIVES-IN001, for more information on impedance grounded and ungrounded systems.

Wall Mount Frames 2…5 Power Jumper Screw Removal and Storage

Wall/Flange Mount Frames 2...5 use jumper screws to complete an electrical connection when installed. Install or remove jumper screws according to the recommendations in Table 49.

ATTENTION: Hazard of equipment damage exists if jumpers are not properly disconnected. For Frames 2…5, completely remove the jumper screw from the circuit board.

When power jumper screws are not used, they are stored on the left interior chassis wall as shown.

Figure 121 - Typical Wall Mount Frames 2…5 Jumper Screw Storage Location (Frame 4 shown)

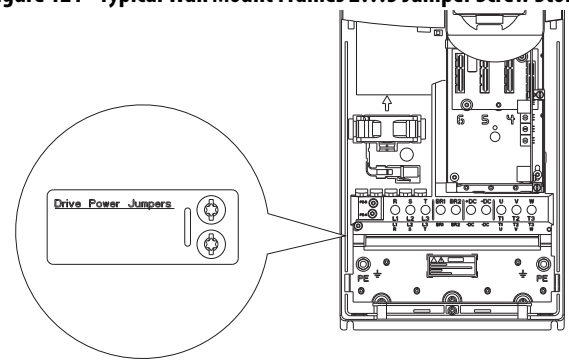

When screws are installed, use this torque and tool:

- Recommended torque = 1.36 N•m (12.0 lb•in) ±0.14 N•m (1.2 lb•in)
- Recommended screwdriver = 6.4 mm (0.25 in.) flat or T15 hexalobular

Figure 122 - Typical Wall Mount Frames 2…5 Jumper Screw Installation Locations (Frame 4 shown)

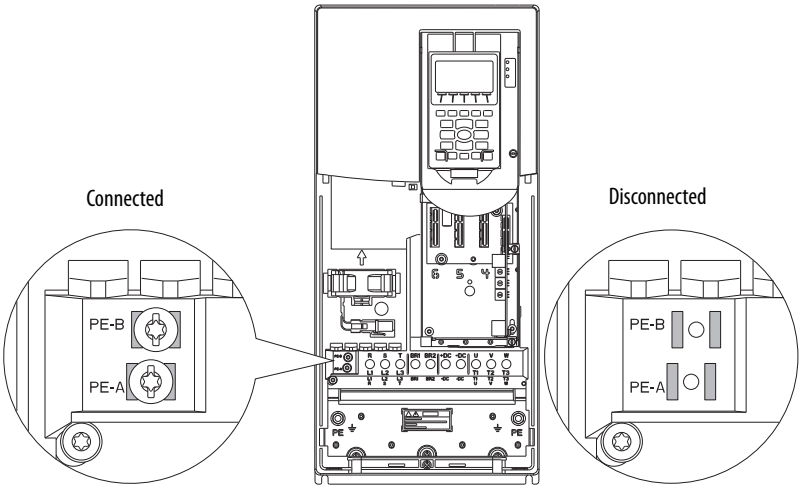

Wall Mount Frames 6 and 7 Power Jumper Wire Removal and Storage

Wall/Flange mount frames 6 and 7 use jumper wires to complete an electrical connection when installed. Install or remove jumper wires according to the recommendations in Table 49.

ATTENTION: Hazard of equipment damage exists if jumpers are not properly disconnected. For frames 6 and 7, secure the disconnected jumper wire to the insulated position provided.

When jumper wires are connected, the spade connector should be pressed firmly onto the sheet metal tab.

Figure 123 - Wall Mount Frame 6 Jumper Wire Locations

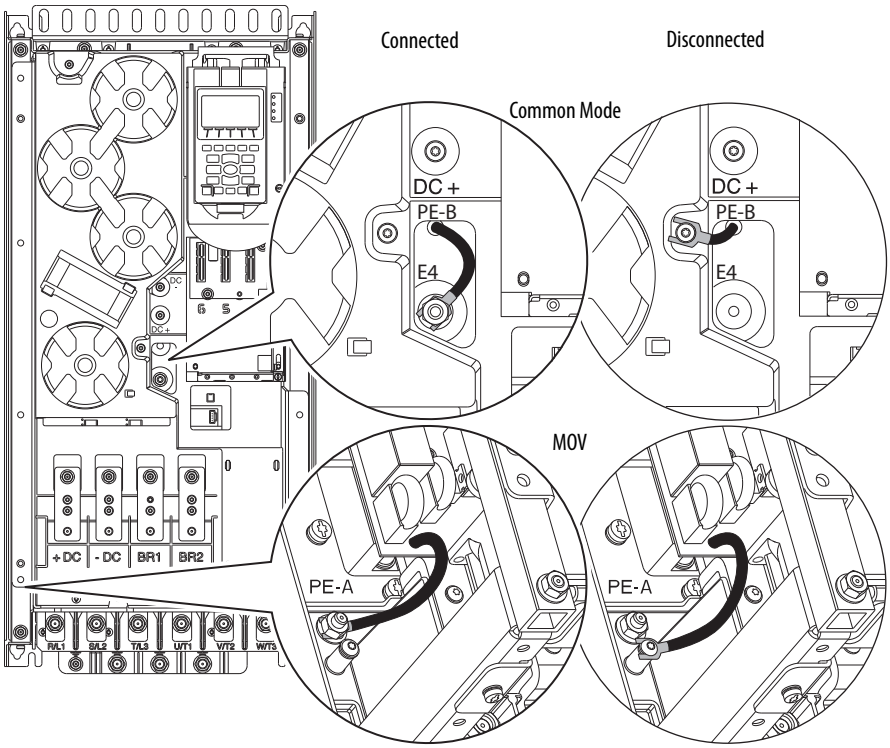

When jumper wires are connected, use this torque and tools:

- Recommended torque (screws and nuts) = 1.36 N•m (12.0 lb•in)
- Recommended hex socket = 7 mm
- Recommended screwdriver = T20 Hexalobular

Figure 124 - Wall Mount Frame 7 Jumper Wire Locations

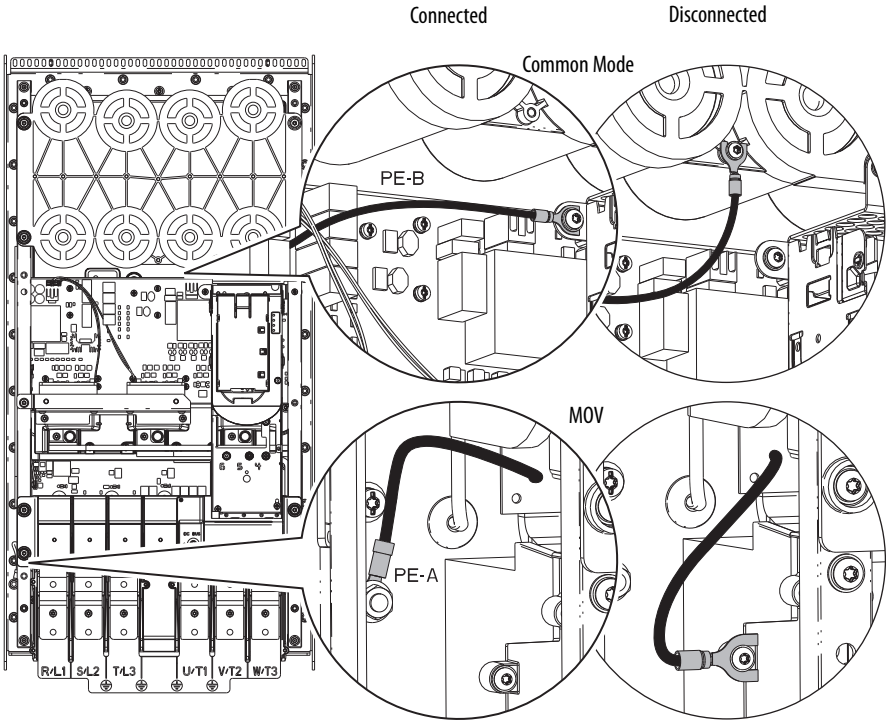

When jumper wires are connected, use this torque and tools:

- Recommended torque (screws and nuts) = 1.36 N•m (12.0 lb•in)
- Recommended hex socket = 7 mm
- Recommended screwdriver = T20 Hexalobular

Floor Mount Frames 8…10 Drive Assembly Jumper Removal and Storage

Frame 8...10 drive assemblies use jumper plugs to complete an electrical connection when installed. Install or remove jumper plugs according to the recommendations in Table 50.

ATTENTION: Hazard of equipment damage exists if jumpers are not properly disconnected or are set differently between drive assemblies. For Frame 8…10 drive assemblies, secure the disconnected jumper plug in the socket that is provided and verify that all drive assemblies are configured the same.

Figure 125 - Frames 8…10 Drive Assembly PE-B Common Mode Jumper Location

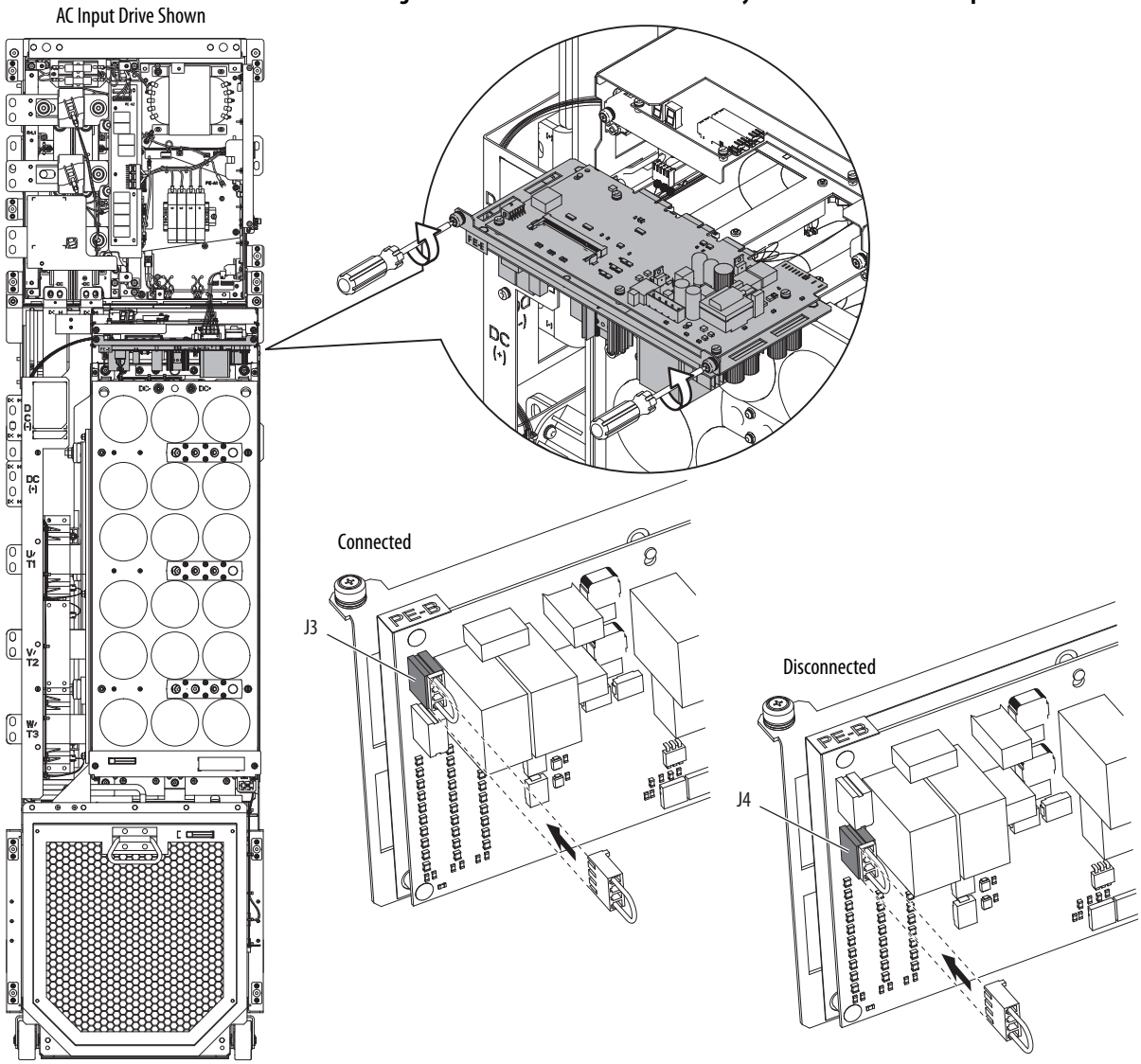

For removal and installation of the inverter power control board tray, use this torque and tool:

- Recommended torque = 1.86 N•m (16.0 lb•in)
- Recommended screwdriver = T20 Hexalobular

Figure 126 - Drive Assembly PE-A1 MOV and PE-A2 Input Filter Caps Jumper Location

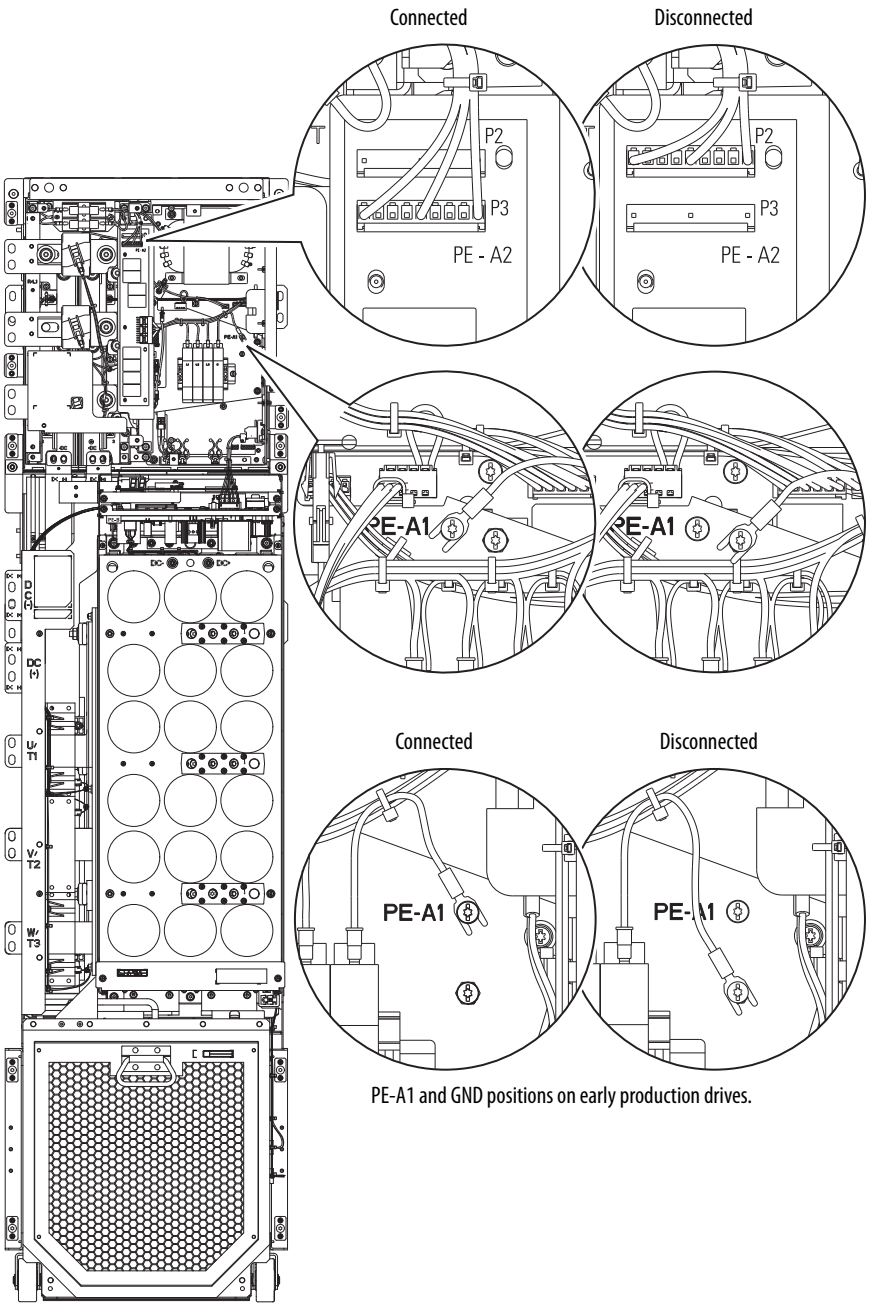

PE-A1 and GND positions on early production drives.

When the PE-A1 jumper wire is connected, use this torque and tool:

- Recommended torque = 1.8 N•m (16.0 lb•in)
- Recommended screwdriver = T20 Hexalobular

IMPORTANT PE-A1 and PE-A2 jumper are only used by three-phase input drive assemblies and are not applicable to common DC input drives assemblies.

I/O Wiring

Important points to remember about I/O wiring:

- Always use copper wire.
- Wire with an insulation rating of 600V or greater is recommended.
- Separate control and signal wires from power wires by at least 0.3 meters (1 foot).
- For CE compliance, 115V digital input wiring must be shielded or must not exceed 30 m (98.4 ft) in length.
- To maintain electrical safety for all user-accessible low voltage circuits (SELV and PELV circuits) for I/O terminals that are designated for 24V or lower voltage, follow these guides:
  - Do not connect to a circuit of higher voltage.
  - Do not connect to a circuit that is not adequately insulated from dangerous voltages with double or reinforced insulation within other connected equipment or wiring.
- To provide electrical safety for user-accessible low voltage I/O circuits that are referenced to earth (PELV circuits) and that can be touched simultaneously, provide a common earth reference for all equipment that is connected to the drive.

IMPORTANT I/O terminals that are labeled '(–)' or 'Common' are not referenced to earth ground and are designed to reduce common mode interference. Grounding these terminals can cause signal noise.

ATTENTION: Hazard of personal injury or equipment damage exists when using bipolar input sources. Noise and drift in sensitive input circuits can cause unpredictable changes in motor speed and direction. Use speed command parameters to help reduce input source sensitivity.

I/O Terminal Blocks

This section provides specifications for the I/O terminal blocks.

Table 51 - Main Control Board I/O Terminal Block Specifications

Name	Wire Size Range mm^2 (AWG)		Torque N•m (lb•in)		Strip Length mm (in.)
	Max	Min	Max	Recommended	
753 Control Module TB1, TB2, and TB3	2.5 (14)	0.3 (28)	0.25 (2.2)	0.2 (1.8)	6 (0.24)
755 Control Module TB1	2.5 (14)	0.3 (28)	0.25 (2.2)	0.2 (1.8)	6 (0.24)

Table 52 - Three-phase Drive Assembly I/O Terminal Block and Connector Specifications

Name	Wire Size Range mm^2 (AWG)		Torque N•m (lb•in)		Strip Length
	Max	Min	Max	Recommended	
Converter TB1 and TB2	4.0 (12)	0.25 (24)	0.5 (4.4)	0.4 (3.5)	7 (0.28)
Fiber Interface PCB Connector P13	4.0 (12)	0.25 (24)	0.5 (4.4)	0.4 (3.5)	7 (0.28)
Fiber Interface PCB Connector P14	2.5 (14)	0.3 (28)	0.25 (2.2)	0.2 (1.8)	6 (0.24)

Table 53 - Common DC Input Drive Assembly I/O Terminal Block and Connector Specifications

Name	Wire Size Range mm^2 (AWG)		Torque N•m (lb•in)		Strip Length
	Max	Min	Max	Recommended	
Common DC input TB1…TB5	4.0 (12)	0.25 (24)	0.5 (4.4)	0.4 (3.5)	7 (0.28)
Fiber Interface PCB Connector P13	4.0 (12)	0.25 (24)	0.5 (4.4)	0.4 (3.5)	7 (0.28)
Fiber Interface PCB Connector P14	2.5 (14)	0.3 (28)	0.25 (2.2)	0.2 (1.8)	6 (0.24)

Table 54 - I/O Wire Recommendations

Type		Wire Types	Description	Min Insulation Rating
Signal (1) (2) (3)	Standard analog I/O	–	0.750 mm^2 (18 AWG), twisted-pair, 100% shield with drain.	300V, 75…90 °C (167…194 °F)
	Remote pot	–	0.750 mm^2 (18 AWG), 3 conductor, shielded.	
	Encoder/ Pulse I/O <30 m (98.4 ft)	Combined	0.196 mm^2 (24 AWG) Individually shielded pairs.	
	Encoder/ Pulse I/O 30…152 m (100…500 ft)	Signal	0.196 mm^2 (24 AWG) Individually shielded pairs.	
		Power	0.750 mm^2 (18 AWG) in.dividually shielded pairs	
		Combined	0.330 mm^2 (22 AWG), power is 0.500 mm^2 (20 AWG) individually shielded pairs.	
	Encoder/ Pulse I/O 152…259 m (500…850 ft)	Signal	0.196 mm^2 (24 AWG) Individually shielded pairs.	
		Power	0.750 mm^2 (18 AWG) individually shielded pairs.	
		Combined	0.750 mm^2 (18 AWG) individually shielded pairs.	
Digital I/O Safety Inputs Homing Inputs (1)(2)(3)(4)	Shielded	Multi-conductor shielded cable	0.750 mm^2 (18 AWG), 3 conductor, shielded.	300V, 60 °C (140 °F)
	Unshielded	–	Per US NEC or applicable national or local code.	

(1) Separate control and signal wires from power wires by at least 0.3 meters (1 foot).
(2) If the wires are short and contained within a cabinet that has no sensitive circuits. The use of shielded wire is not necessary, but is always recommended.
(3) I/O terminals that are labeled "(–)" or "Common" are not referenced to Earth Ground and are designed to reduce common mode interference. Grounding these terminals can cause signal noise.
(4) Safety option modules 20-750-S and 20-750-S1 require shielded cable.

Access Drive Control Pod

To access the drive control pod, follow the steps for the frame size of your drive.

1. Remove the drive cover.

   For wall mount Frames 1...5, follow these steps.
   a. Squeeze locking tabs and pull out bottom of cover.
   b. Pull cover down and away from the chassis.

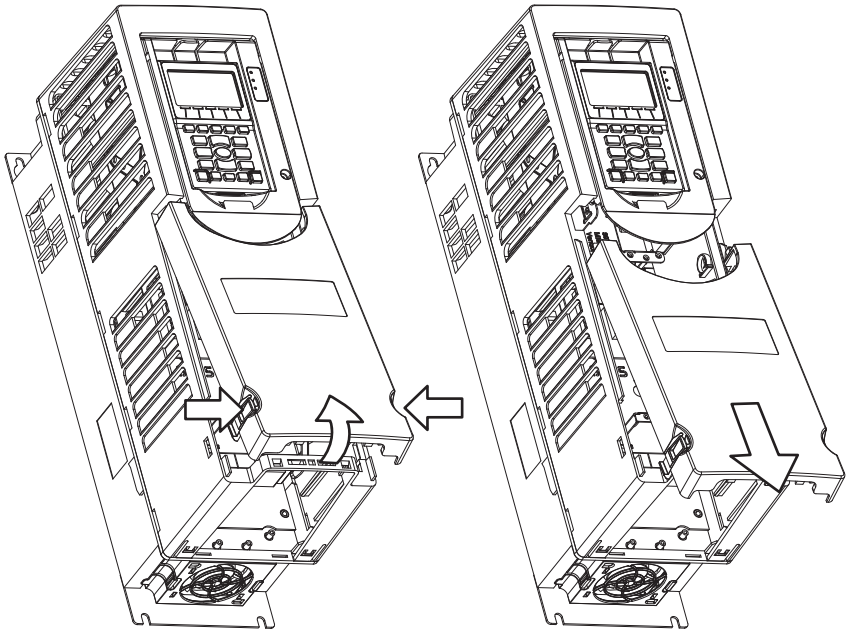

   For wall mount Frames 6...7, follow these steps.
   a. Loosen door screws.
   b. Gently pry the door open to remove.

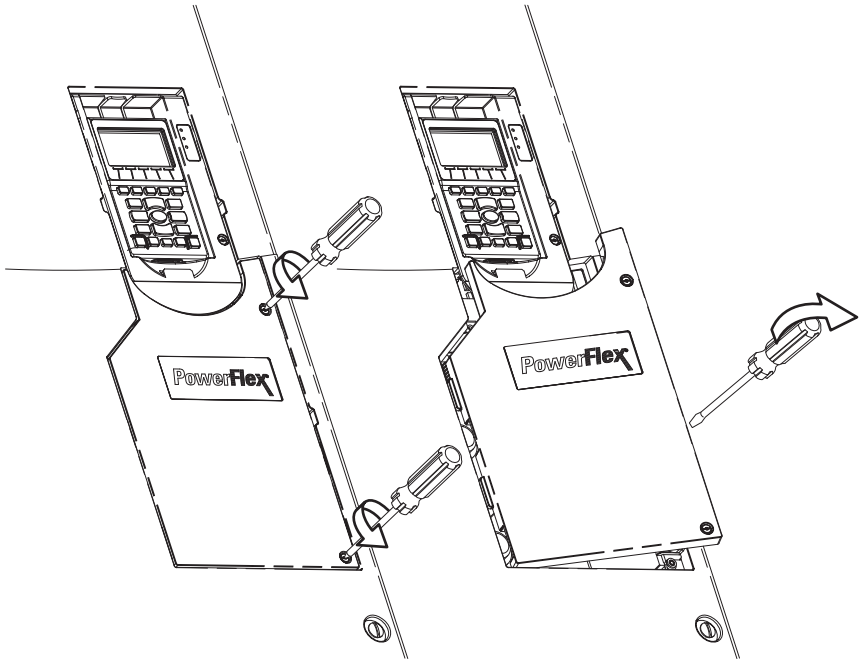

For floor mount Frames 8...10, follow these steps.

a. Remove top screws.

b. Loosen bottom screws.

c. Remove the right front cover.

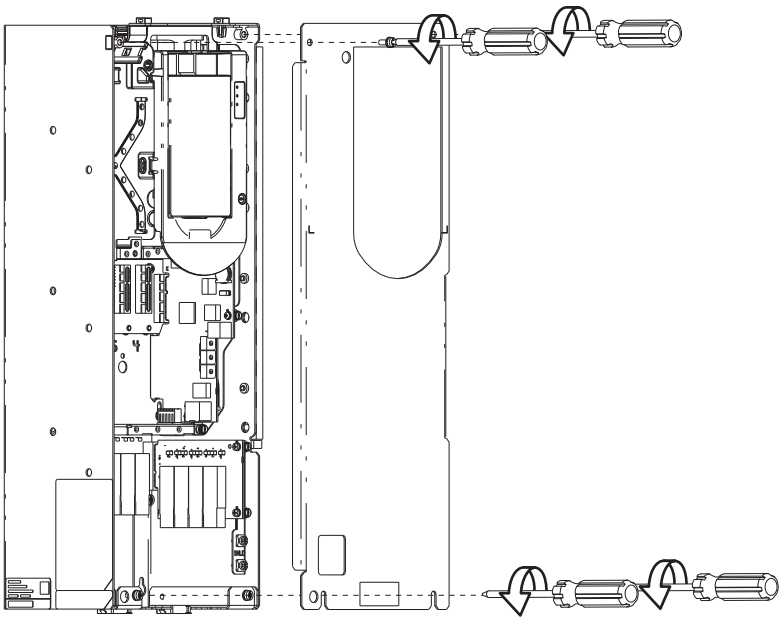

2. For wall mount Frame 1, follow these steps.
   a. Lift the chassis cover.
   b. Loosen the retention screw.
   c. Use a screwdriver to release the chassis cover locking tabs.
   d. Lift the chassis cover until the latch engages.

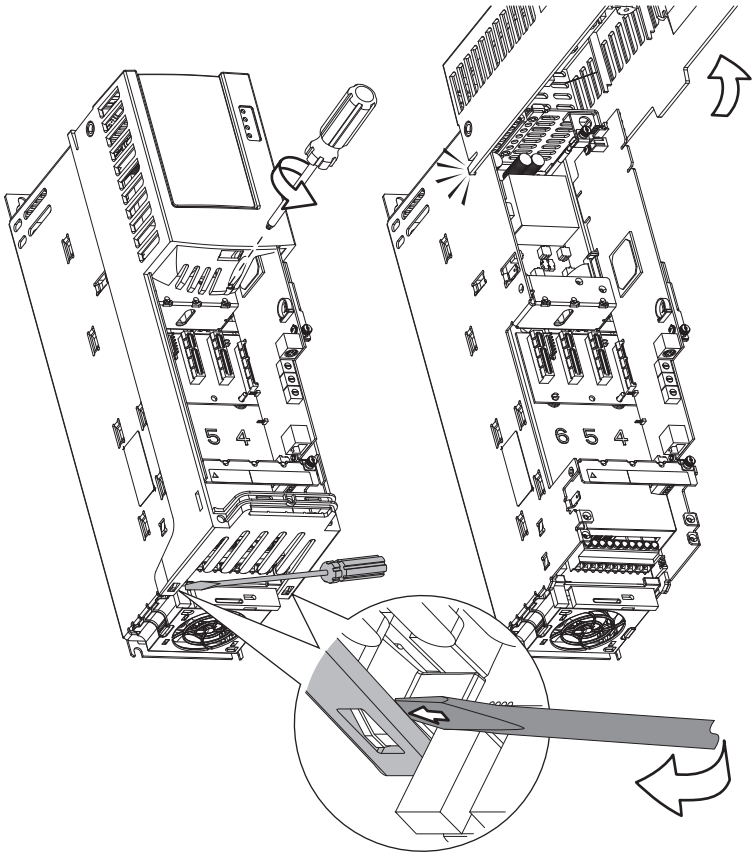

For wall mount Frames 2...7, follow these steps.

a. Lift the Human Interface Module (HIM) cradle.
b. Loosen the retention screw.
c. Lift the cradle until the latch engages.

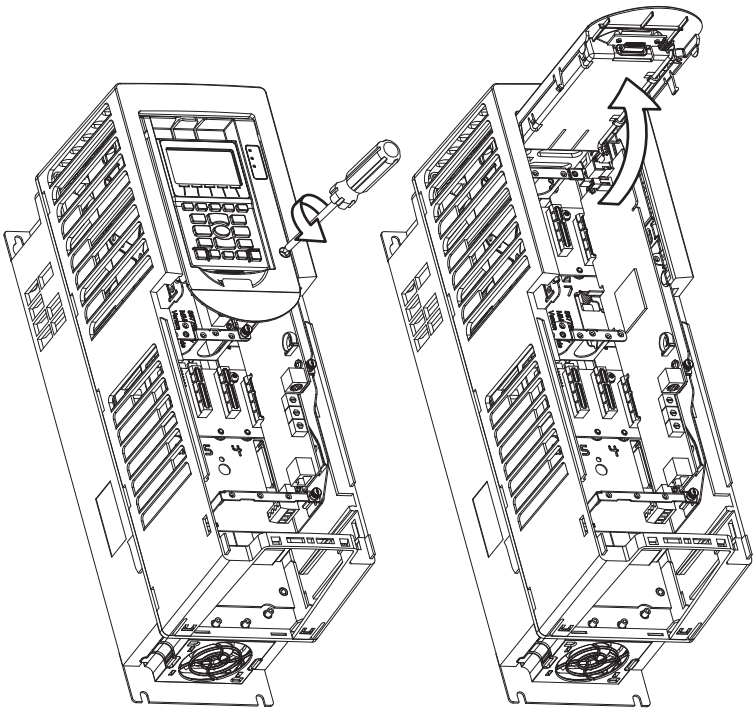

For floor mount Frames 8...10, follow these steps.

a. Loosen the retention screw.
b. Lift the cradle until the latch engages.

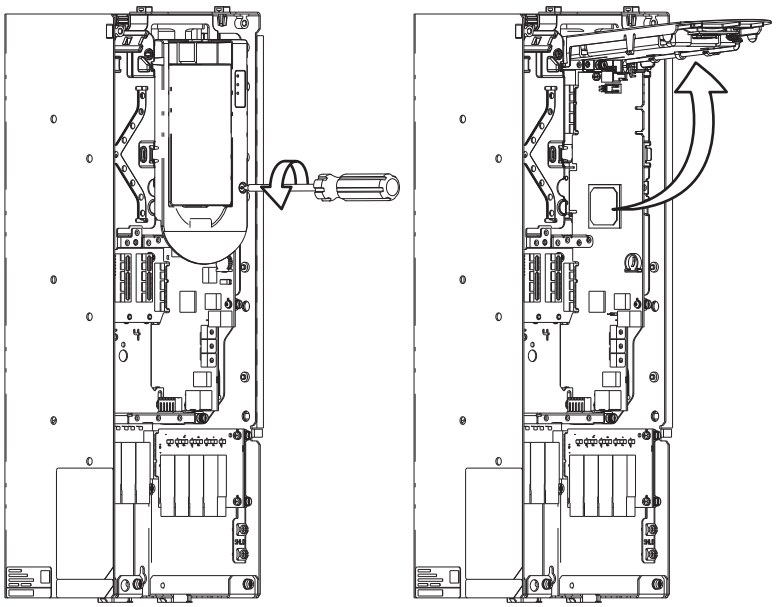

PowerFlex 753 Main Control Board

This section provides details for the PowerFlex® 753 main control board.

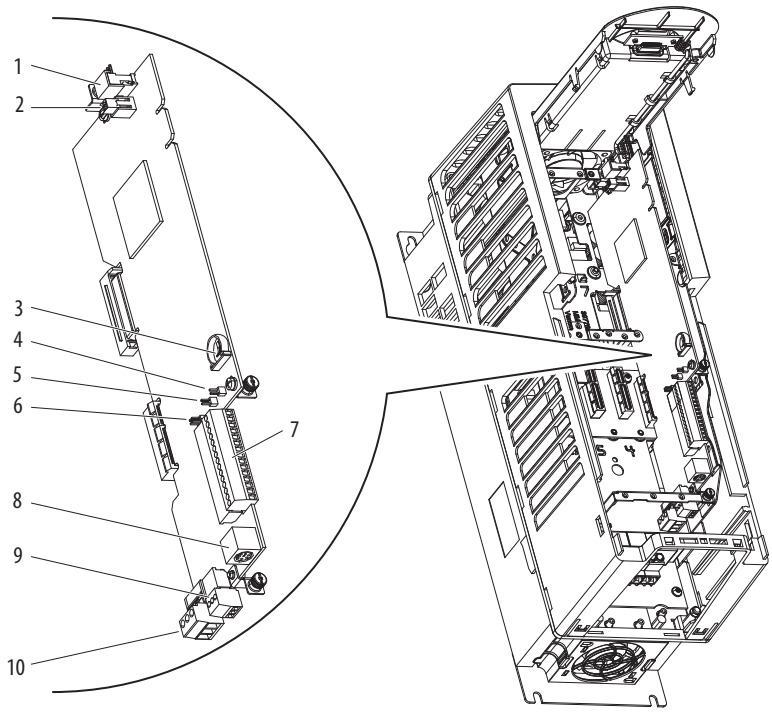

Table 55 - PowerFlex 753 Main Control Board Details

No.	Name	Description
1	HIM connector	DPI™ port 1 (HIM cradle) connection.
2	Fan connector	Power supply for internal cooling fan (Frames 2 and 3).
3	+ - Battery receptacle	User installed CR1220 lithium coin cell battery provides power to the real-time clock (optional, not supplied). Preserves the real-time clock setting in the event power to the drive is lost or cycled.
4	ENABLE jumper	Hardware enable jumper. TB3 becomes an Enable when this jumper is removed.
5	SAFETY jumper	Safety enable jumper. Removed when safety option is installed.
6	Jumper J4 input mode	Analog input mode jumper. Selects voltage mode or current mode.
7	TB1	I/O terminal block.
8	DPI port 2	Cable connection for handheld and remote HIM options.
9	TB3	Digital input terminal block. See Important at Table 59.
10	TB2	Relay terminal block.

Table 56 - J4 Input Mode Jumper

Jumper Position	Voltage Mode	Current Mode
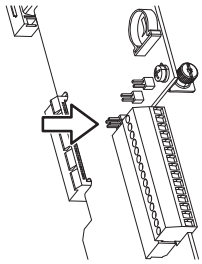	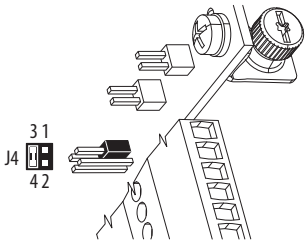	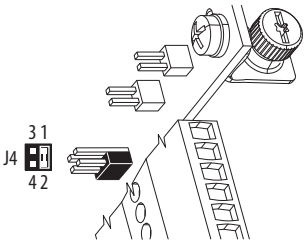

Table 57 - TB1 Terminal Designations

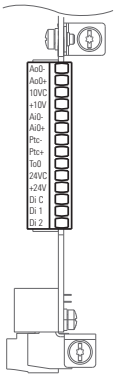

Terminal	Name	Description	Related Parameter
Ao0–	Analog out 0 (–)	Bipolar, ±10V[1], 11 bit and sign, 2 kΩ min load. 4…20 mA [1], 11 bit and sign, 400 Ω max load.	270
Ao0+	Analog out 0 (+)		
10VC	10V common	For (+) 10V references. 2 kΩ min.	
+10V	+10V reference		
Ai0–	Analog input 0 (–)	Isolated[2], bipolar, differential, 11 bit and sign. Voltage Mode:[3] ±10V at 88 kΩ input impedance. Current Mode:[3] 0…20 mA at 93 Ω input impedance	255
Ai0+	Analog input 0 (+)		
Ptc–	Motor PTC (–)	Motor protection device (Positive Temperature Coefficient). [4]	250
Ptc+	Motor PTC (+)		
T0	Transistor output 0	Open drain output, 48V DC, 250 mA max load.	
24VC	24V common	Drive supplied logic input power. 150 mA max	
+24V	+24V DC		
Di C	Digital input common	24V DC (30V DC max) – Opto isolated High state: 20…24V DC Low state: 0…5V DC	220
Di 1	Digital input 1		
Di 2	Digital input 2		

(1) Mode is selected only by parameter.
(2) Differential Isolation – External source must be maintained at less than 160V regarding PE. Input provides high common mode immunity.
(3) Mode is selected by jumper J4.
(4) See HW Input PTC on page 251 for PTC data.

IMPORTANT 753 Main Control Board I/O TB1 wiring examples begin on page 250.

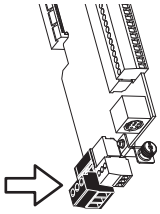

Table 58 - TB2 Terminal Designations

Fixed I/O	Terminal	Name	Description	Rating	Related Parameter
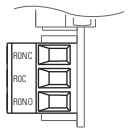	R0NC	Relay 0 N.C.	Output Relay 0 normally closed contact	240V AC, 24V DC, 2 A max Only resistive	285 286 291 292
	R0C	Relay 0 Common	Output Relay 0 common		
	R0NO	Relay 0 N.O.	Output Relay 0 normally open contact	240V AC, 24V DC, 2 A max General-purpose (inductive)/resistive	

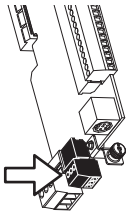

Table 59 - TB3 Terminal Designations

Power Block	Terminal	Name	Description	Related Parameter
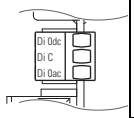	Di 0dc	Digital input 0 24V DC (30V DC max)	Connections for digital input 0 when signal is DC power. High state: 20…24V DC Low state: 0…5V DC	220
	Di C	Digital input common	Digital input common	
	Di 0ac	Digital input 0 120V AC (132V AC max)	Connections for digital input 0 when signal is AC power. High state: 100…132V AC Low state: 0…30V AC	

IMPORTANT This terminal becomes a hardware enable when the ENABLE jumper is removed.

PowerFlex 755 Main Control Board

This section provides details for the PowerFlex 755 main control board.

Wall Mount Frames 1…7

This section provides details for the PowerFlex 755 main control board, frames 1...7.

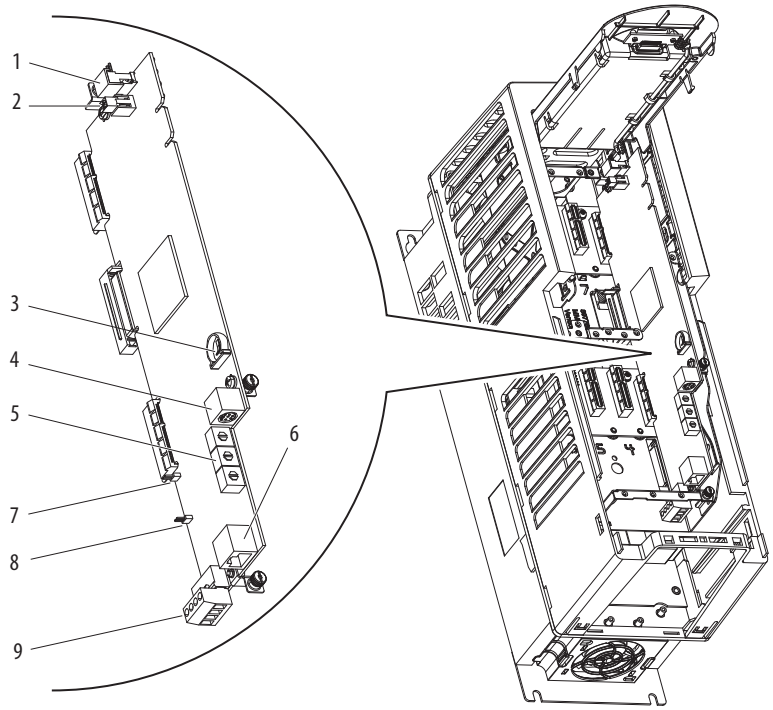

Table 60 - PowerFlex 755 Main Control Board Details

No.	Name	Description
1	HIM connector	DPI port 1 (HIM Cradle) connection.
2	Fan connector	Power supply for internal cooling fan (Frames 2 and 3).
3	Battery receptacle	User installed CR1220 lithium coin cell battery provides power to the real-time clock (optional, not supplied). Preserves the real-time clock setting in the event power to the drive is lost or cycled.
4	DPI port 2	Cable connection for handheld and remote HIM options.
5	Embedded EtherNet/IP™ address selectors(1)	Rotary switches for setting lowest octet of EtherNet address (forces address to 192.168.1.*xxx*). See the PowerFlex 750-Series AC Drives Programming Manual, publication 750-PM001, for instructions on setting the IP address.
6	Embedded EtherNet/IP(1) connector	Network cable connection.
7	SAFETY jumper	Safety enable jumper. Removed when safety option is installed.
8	ENABLE jumper	Hardware enable jumper. TB1 becomes an Enable when this jumper is removed.
9	TB1	I/O terminal block.

(1) See the PowerFlex 755 Drive Embedded EtherNet/IP Adapter User Manual, publication 750COM-UM001.

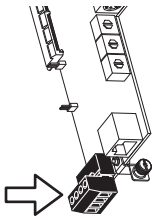

Table 61 - TB1 I/O Terminal Designations

Fixed I/O	Terminal	Name	Description
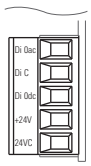	Di 0ac	Digital input 0 120V AC (132V AC max)	Connections for AC power supply. High state: 100…132V AC Low state: 0…30V AC
	Di C	Digital input common	Digital input common
	Di 0dc	Digital input 0 24V DC (30V DC max)	Connections for DC power supply. High state: 20…24V DC Low state: 0…5V DC
	+24V	+24V power (50 mA max)	Connections for drive supplied 24V power.
	24VC	24V common	

Floor Mount Frames 8…10

This section provides details for the PowerFlex 755 main control board, frames 8...10.

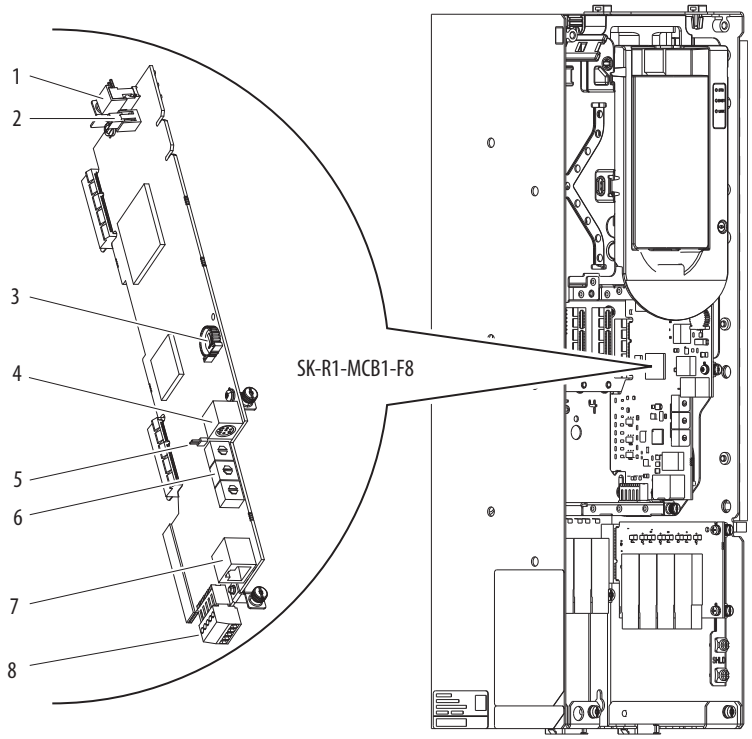

Table 62 - Control Board Details

No.	Name	Description
1	HIM connector	DPI port 1 (HIM Cradle) connection.
2	Fan connector	Power supply for internal cooling fan.
3	+ − Battery receptacle	User installed CR1220 lithium coin cell battery provides power to the real-time clock (optional, not supplied). Preserves the real-time clock setting in the event power to the drive is lost or cycled.
4	DPI port 2	Cable connection for handheld and remote HIM options.

No.	Name	Description
5	ENABLE jumper	Hardware enable jumper. Removed when a hardware enable configuration is used.
6	Embedded EtherNet/IP(1) address selectors	Rotary switches for setting lowest octet of EtherNet address (forces address to 192.168.1.*xxx*). See the PowerFlex 750-Series AC Drives Programming Manual, publication 750-PM001, for instructions on setting the IP address.
7	Embedded EtherNet/IP(1) connector	Network cable connection.
8	TB1	I/O terminal block.

(1) See the PowerFlex 755 Drive Embedded EtherNet/IP Adapter User Manual, publication 750COM-UM001.

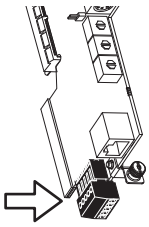

Table 63 - TB1 I/O Terminal Designations

Fixed I/O	Terminal	Name	Description
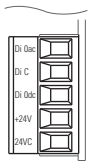	Di 0ac	Digital input 0 120V AC (132V AC max)	Connections for AC power supply. High state: 100…132V AC Low state: 0…30V AC
	Di C	Digital input common	Digital input common
	Di 0dc	Digital input 0 24V DC (30V DC max)	Connections for DC power supply. High state: 20…24V DC Low state: 0…5V DC
	+24V	+24V power	Connections for drive supplied 24V power. 150 mA max
	24VC	24V common	

Hardware Enable Circuitry

Each main control board has one digital input, digital input 0, which can be used as a general-purpose programmable input. Or you can remove a jumper to configure as a dedicated hardware enable, which is unaffected by parameter settings.

- PowerFlex 753 – digital input 0 is found on TB3
- PowerFlex 755 – digital input 0 is found on TB1

To configure digital input 0 as a dedicated hardware enable, follow these steps.

1. Access the control pod as described beginning on page 229.
2. Locate and remove ENABLE jumper on the Main Control Board (see the figure for your drive):
   - PowerFlex 753 – ENABLE Jumper Location, Figure 127
   - PowerFlex 755 – ENABLE Jumper Location (Wall Mount Frames 1...7), Figure 128
   - PowerFlex 755 – ENABLE Jumper Location (Floor Mount Frames 8...10), Figure 129

Figure 127 - PowerFlex 753 – ENABLE Jumper Location

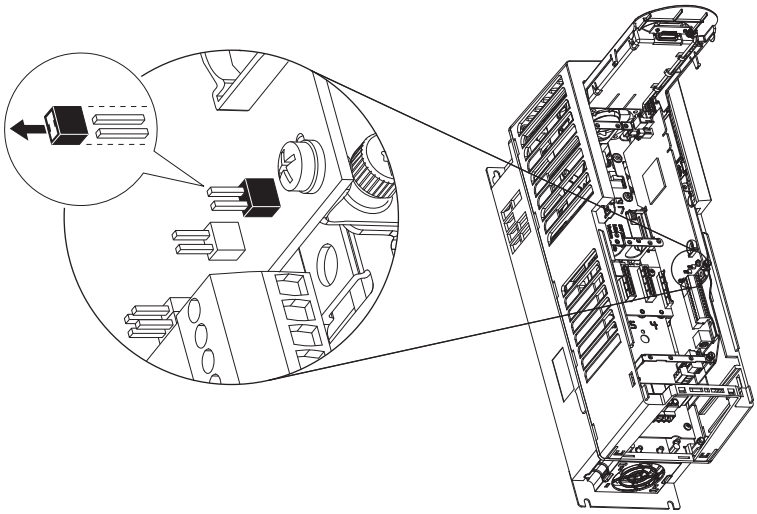

Figure 128 - PowerFlex 755 – ENABLE Jumper Location (Wall Mount Frames 1…7)

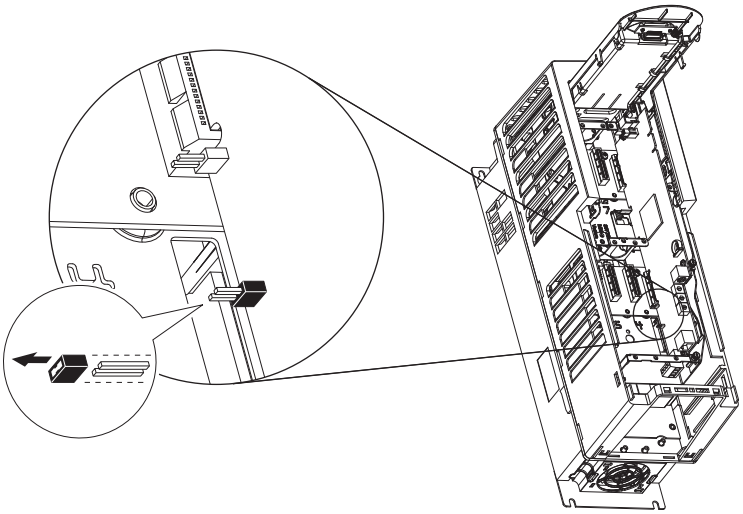

Figure 129 - PowerFlex 755 – ENABLE Jumper Location (Floor Mount Frames 8…10)

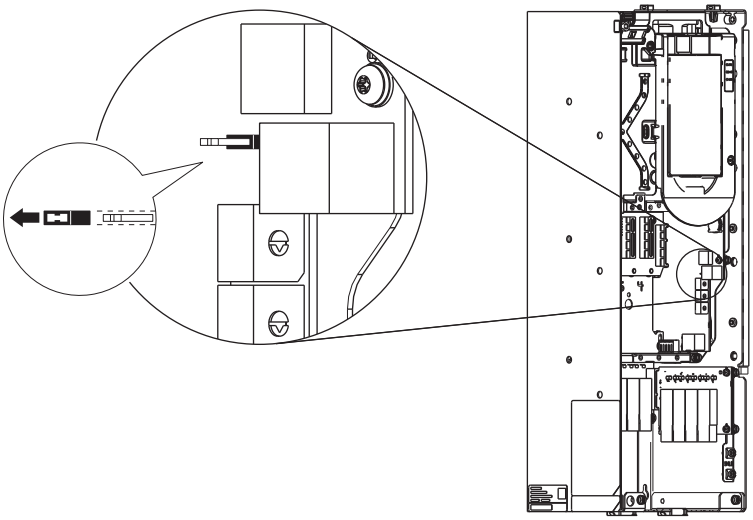

Safety Enable Circuitry

The drive ships with the safety jumper (SAFETY) installed. This jumper must be removed when using the Safe Torque Off or Safe Speed Monitoring safety options.

IMPORTANT Failure to remove the jumper when using either safety option causes the drive to fault when a start command is issued.

To remove the SAFETY jumper, follow these steps.

1. Access the control pod as described beginning on page 229.
2. Locate and remove SAFETY jumper on the main control board (see the figure for your drive).

Figure 130 - PowerFlex 753 – SAFETY Jumper Location

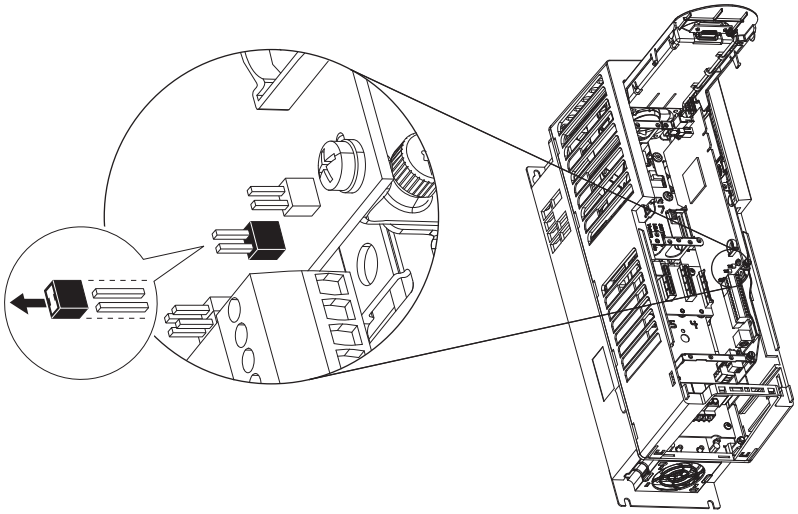

Figure 131 - PowerFlex 755 – SAFETY Jumper Location (Only Wall Mount Frames 1…7)

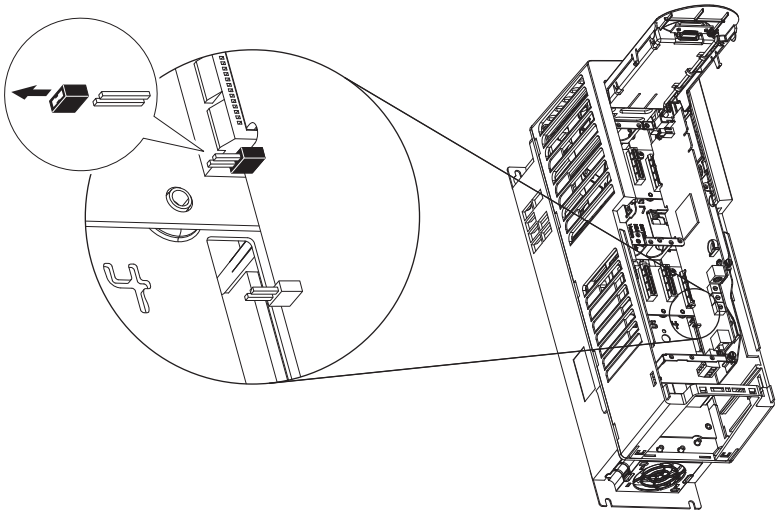

IMPORTANT Floor Mount Frame 8 drives and larger do not have a SAFETY jumper.

PowerFlex 755 Fiber-optic Interface Board

This section provides details for the PowerFlex 755 fiber-optic interface board.

Figure 132 - Floor Mount Frames 8…10

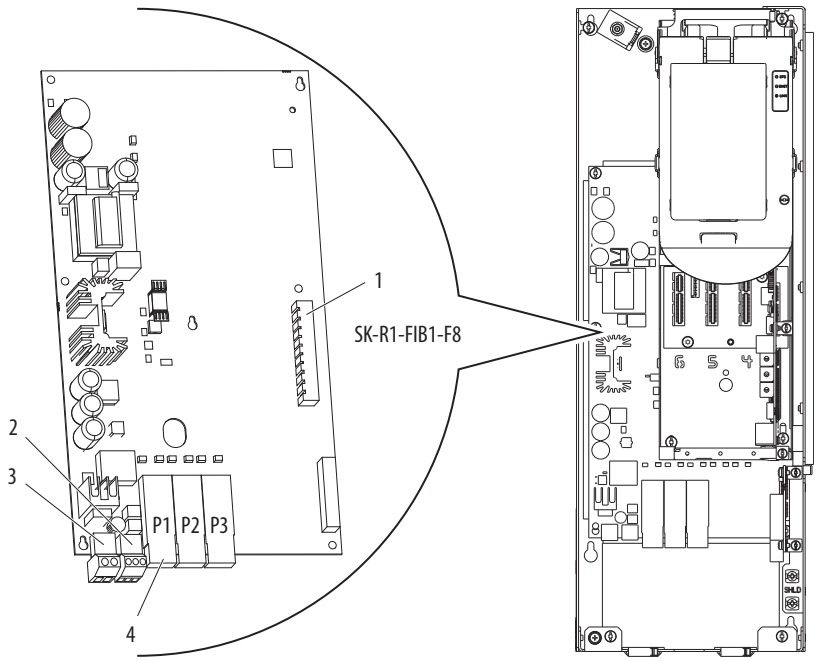

Table 64 - Fiber-optic Interface Board Details

No.	Name	Description
1	Main control board connector	98-pin main control board interface connection.
2	P13	Connections for user-supplied 24V power. Powers control circuits when main power is removed.
3	P14	Connections for internal drive-supplied 24V power. Connection is factory-wired and must not be modified. Powers control circuits when main power is connected.
4	Inverter connections	Fiber-optic ports: P1 = INV1, P2 = INV2, P3 = INV3, P4 = INV4, P5 = INV5

Table 65 - P13 Terminal Designations

Power Block	Terminal	Name	Description
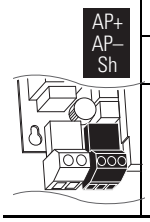	AP+	+24V auxiliary power	Connections for customer supplied power supply: 24V DC ±10%, 5 A, PELV (protective extra low voltage) or SELV (safety extra low voltage)
	AP–	Auxiliary power common	
	Sh	Shield	Terminating point for wire shields.

Table 66 - P14 Terminal Designations

Power Block	Terminal	Name	Description
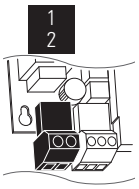	1	+24V power	Connections for drive supplied power.
	2	Power common	

AC Input Drive Control and Power Terminal Block

This section provides details for the AC input drive control and power terminal block.

Figure 133 - Floor Mount Frames 8…10

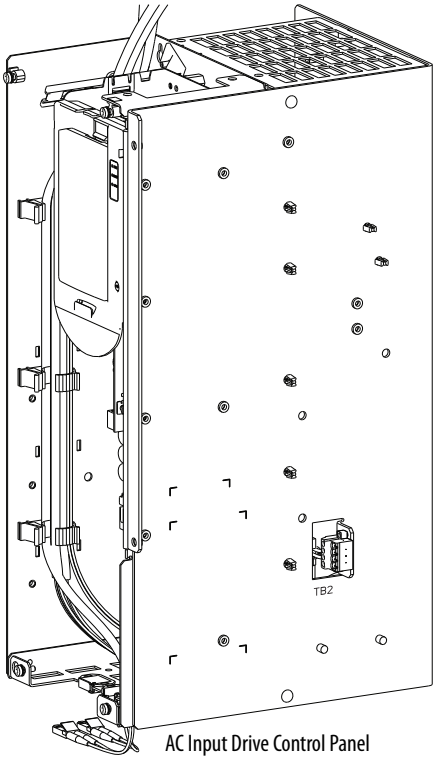

Table 67 - TB2 Terminal Designations

Fixed I/O	Terminal	Name	Description	Rating	Related Parameter
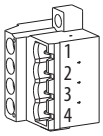	1	SHUNT TRIP COMMON	Output Relay common	125V AC, 10 A max, 1250VA Only resistive	16 On port 11
	2	SHUNT TRIP NO	Output Relay normally open contact.		
	3	FAN 240VAC OUT NEUTRAL	Connections for cooling fans.	240V AC, 50/60 Hz, 1.4 A, 336VA	
	4	FAN 240VAC OUT HOT			

Shunt Trip Contact Operation

A ground fault occurs when the input ground current exceeds the threshold set in P16 [Gnd Cur Flt Lvl] On port 11 for five line cycles.

Common DC Input Drive Control and Power Terminal Blocks

This section provides details for the common DC input drive control and power terminal block.

Figure 134 - Floor Mount Frames 8…10

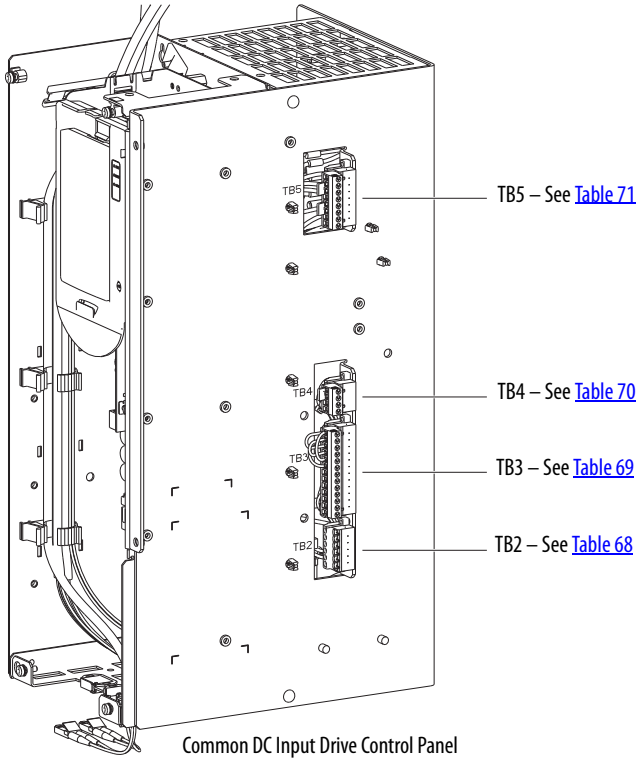

Table 68 - TB2 Terminal Designations

Fixed I/O	Terminal	Name	Description	Rating
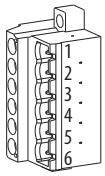	1	UPS 120V AC IN NEUTRAL	Connections for uninterruptible power supply (UPS).(1)	N/A
	2	UPS 120V AC IN HOT		
	3	CONTROL 120/240VAC IN NEUTRAL	Connections for control power supply.(2)	N/A
	4	CONTROL 120/240VAC IN HOT		
	5	FAN 240VAC OUT NEUTRAL	Connections for cooling fans.	240V AC, 50/60 Hz, 1.4 A, 336VA
	6	FAN 240VAC OUT HOT		

(1) See Uninterruptible Power Supply Connections – Common DC Input Drives on page 248.
(2) See 120/240V AC Power Supply Connections – Common DC Input Drives on page 249.

DC Precharge Board

The DC precharge board provides sensing of bus voltage, monitoring of bus fuses and control over all precharge hardware.

Table 69 - TB3 Terminal Designations

Fixed I/O	Terminal	Name	Description
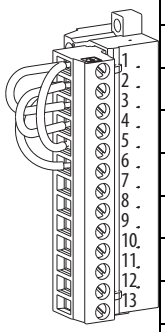	1	I/O 24V	Drive supplied 24V DC I/O power.
	2	I/O 24V COMMON	
	3	EXT. PRCHRG CLOSE/$\overline{\text{OPEN}}$ INPUT+	External precharge close/$\overline{\text{open}}$ input.
	4	EXT. PRCHRG CLOSE/$\overline{\text{OPEN}}$ INPUT-	
	5	EXT. PRCHRG INHIBIT INPUT+	External precharge inhibit input.
	6	EXT. PRCHRG INHIBIT INPUT-	
	7	RESET FAULTS INPUT +	Reset faults input.
	8	RESET FAULTS INPUT -	
	9	PRECHARGE COMPLETE NO	Precharge complete normally open input
	10	PRECHARGE COMPLETE COM	
	11	FAULT OUT NC	Normally closed contact output. Normally open contact output.
	12	FAULT OUT NO	
	13	FAULT OUT COM	
Factory Jumper Settings: • TB3-1 and TB3-3 • TB3-1 and TB3-5 • TB3-2 and TB3-4 • TB3-2 and TB3-6	**IMPORTANT**: Do not remove the factory-installed jumpers.		

Cabinet Door Interlock and Door Switch

The common DC input drive supports the installation of a door interlock solenoid and door switch.

Table 70 - TB4 Terminal Designations

Fixed I/O	Terminal	Name	Description
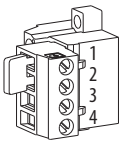	1	DOOR SWITCH CLOSED	Normally open door switch. Door switch input connection. Remove TB4-1 to TB4-2 jumper to wire switch.
	2	I/O 24V	Drive supplied 24V DC power. Door switch supply or power connection.
	3	240V AC NEUTRAL	Solenoid neutral connection.
	4	240V AC HOT DOOR INTERLOCK SOLENOID	Drive supplied 240V AC power. Solenoid hot connection.

Disconnect Switch (SW2) Operation

SW2 Is On	Door Closed	Door Open
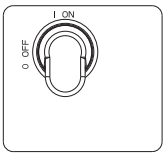 See Figure 42 - on page 77 for location.	Solenoid and door switch circuits are energized.	Alarm is indicated.

120V Output Wiring for Drive Control

The common DC input drive provides limited 120V control power for use with the drive control pod option modules. For terminal block wiring specifications, see Table 53 on page 228.

Table 71 - TB5 Terminal Designations

Fixed I/O	Terminal	Name	Description	Rating
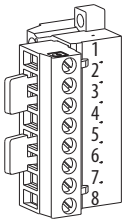	1	UPS 120V AC OUT HOT	Jumper combinations select the source of the 120V AC output for drive control. See Table 72 on page 246.	120V AC, 50/60 Hz, 0.4 A, 48VA Fusing: 1 A, 600V, Class CC, Time Delay
	2	120V AC HOT		
	3	CONTROL 120V AC OUT HOT		
	4	UPS 120V AC OUT NEUTRAL		
	5	120V AC NEUTRAL		
	6	CONTROL 120V AC OUT NEUTRAL		
	7	120V AC OUT NEUTRAL	Drive supplied 120V AC output for drive control.	
	8	120V AC OUT HOT		

Table 72 - TB5 Jumper Settings

120V AC from Control Transformer
Factory Jumper Settings: • TB5-2 and TB5-3 • TB5-5 and TB5-6 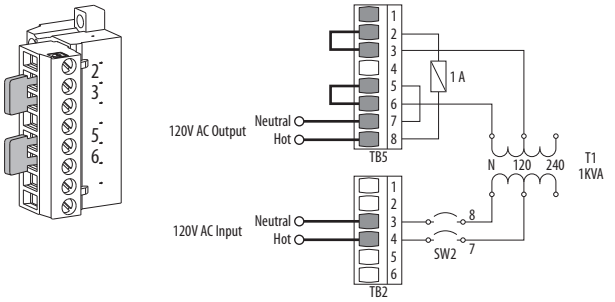

120V AC from User Supplied UPS
User Jumper Settings: • TB5-1 and TB5-2 • TB5-4 and TB5-5 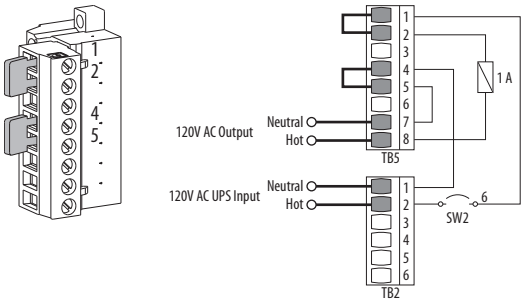

ATTENTION: Hazard of personal injury or equipment damage exists if jumpers are incorrectly set. Verify that the jumpers are set for the correct control scheme before energizing the circuit.

Control Transformer Connections – Common DC Input Drives

The common DC input drive control transformer is factory set to 120V AC input. A 240V AC input setting is also available by changing primary wire connections.

Figure 135 - Control Transformer Voltage Settings – Floor Mount Frames 8…10

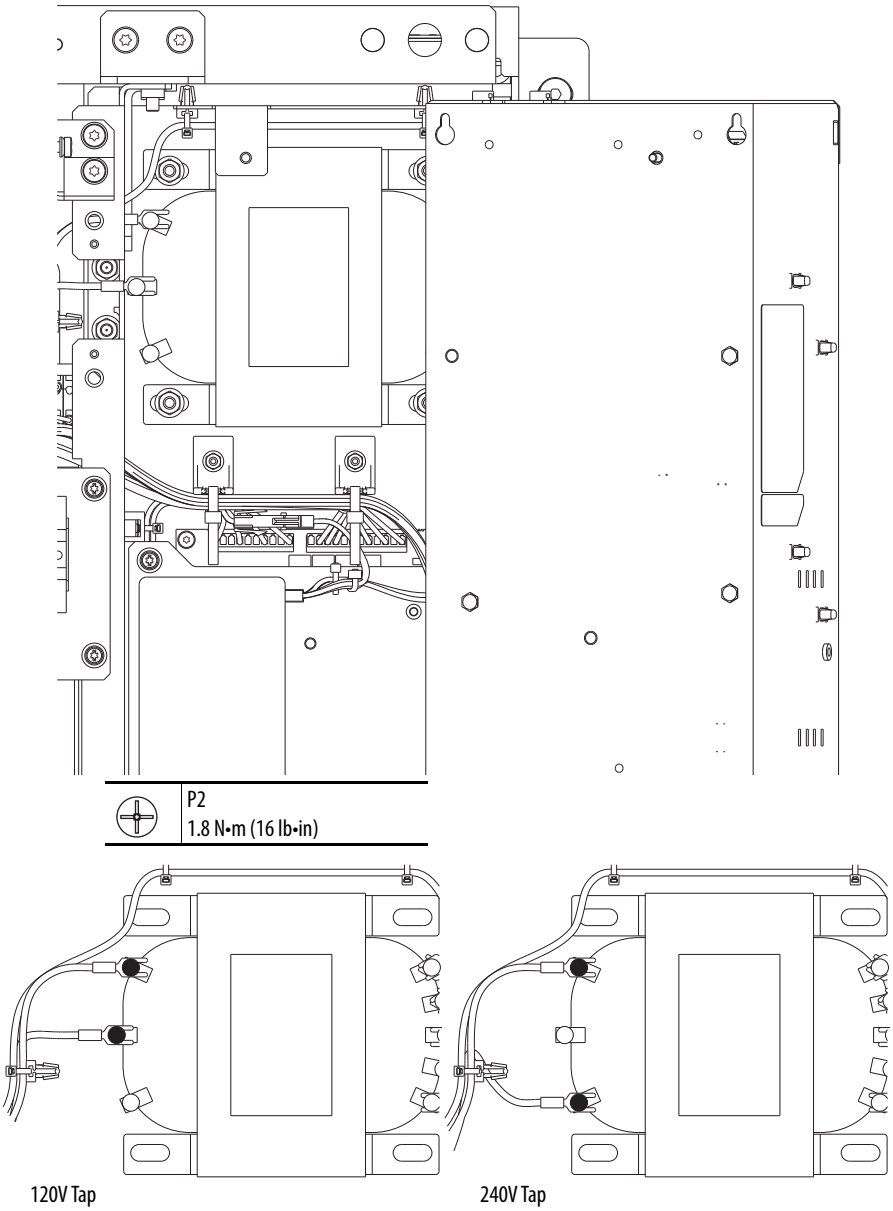

Uninterruptible Power Supply Connections – Common DC Input Drives

The user-supplied 120V AC UPS is connected to the lower 120V rail in the back of the common DC input drive cabinet. The UPS rail is only installed when the P30 UPS Control Bus option is selected. The rail is connected to TB2-1 and TB2-2 on the common DC input drive control panel. To use 120V AC UPS power, configure the TB5 jumpers as shown in Table 72 on page 246.

ATTENTION: To avoid an electric shock hazard when servicing the drive, a means for lockout/tagout of an external 120V uninterruptible power supply must be provided. Or the circuit breaker SW5 must be locked and tagged. Lockout/tagout of the common bus precharge disconnect switch SW2 alone does not provide sufficient protection when servicing the drive.

Figure 136 - UPS Connection Terminals – Floor Mount Frames 8…10

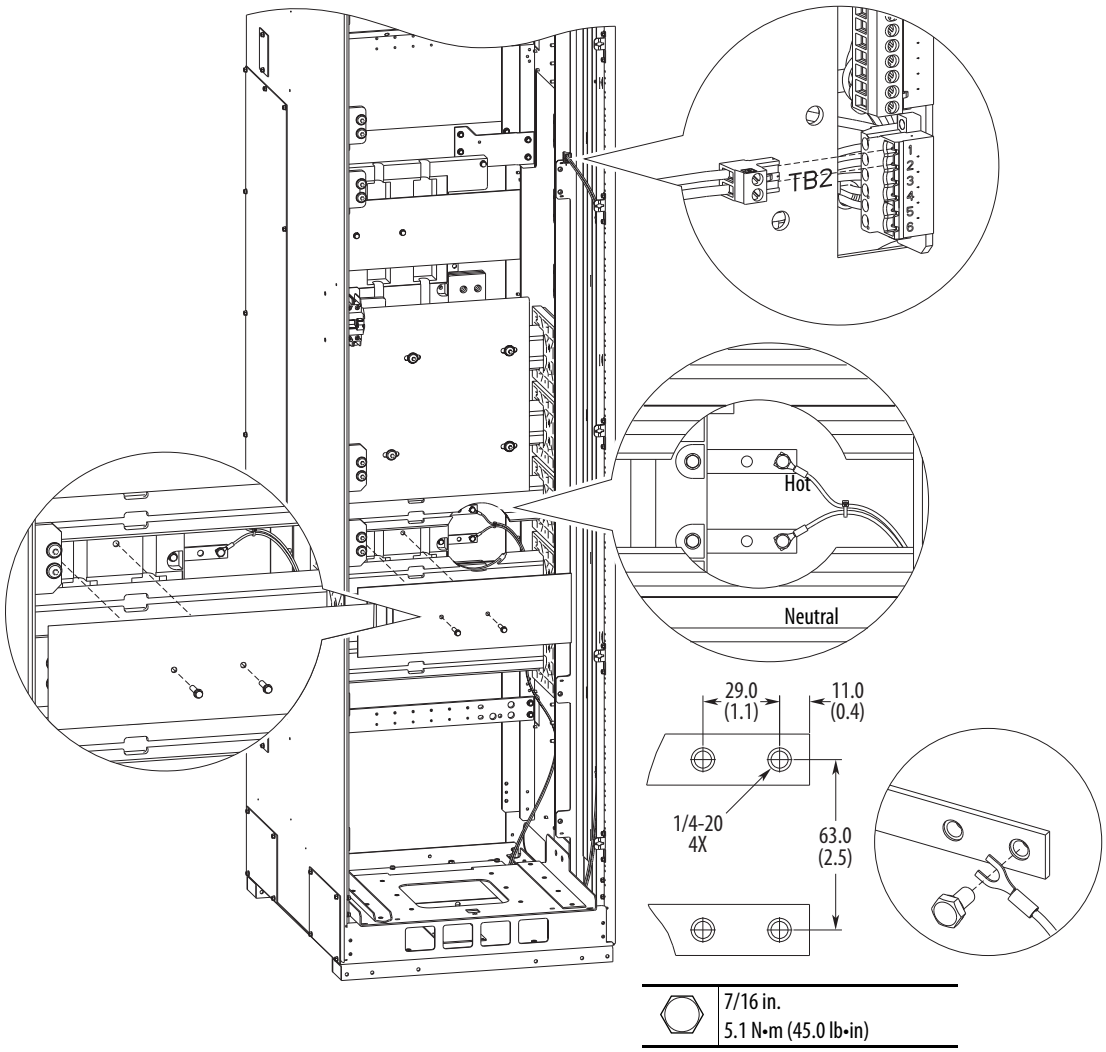

IMPORTANT The UPS wiring is internally wired through the DC input drive disconnect switch SW2 ahead of the UPS terminal connections.

120/240V AC Power Supply Connections – Common DC Input Drives

The drive-supplied 120/240V AC is wired through a circuit breaker that is mounted in the common DC input drive cabinet. The circuit breaker is connected to TB2-3 and TB2-4 on the common DC input drive control panel.

ATTENTION: To avoid an electric shock hazard when servicing the drive, a means for lockout/tagout of an external 120/240V power source must be provided. Or the circuit breaker SW5 must be locked and tagged. Lockout/tagout of the common bus precharge disconnect switch SW2 alone does not provide sufficient protection when servicing the drive.

Figure 137 - 120V Connection Terminals – Floor Mount Frames 8…10

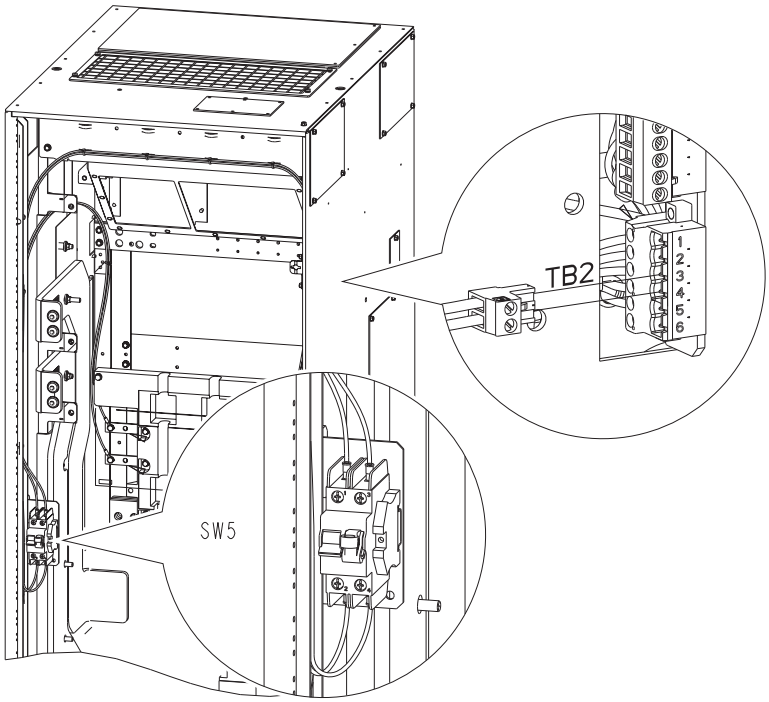

This 13 A circuit breaker provides branch-circuit short circuit and overcurrent protection for the wiring on the primary side of the control transformer, and protection of the transformer primary. Transformer secondary protection (240V output) is provided through a 5 A, 600V, Class CC, time delay fuse.

IMPORTANT The transformer primary wiring is internally wired through the DC input drive disconnect switch SW2 ahead of the control transformer primary terminal connections.

PowerFlex 753 Main Control Board I/O Wiring Examples

This section provides wiring examples for the PowerFlex 753 main control I/O board.

Table 73 - PowerFlex 753 Main Control I/O Board Wiring Examples

Input/Output	Connection Example	Required Parameter Changes
Potentiometer Unipolar Speed Reference 10 kΩ Pot. Recommended (2 kΩ Minimum)	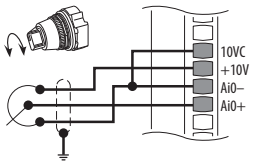 753 Main Control Board TB1 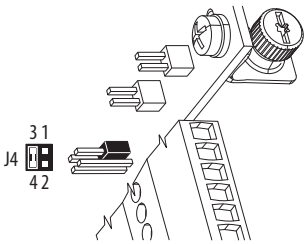	• Set direction mode Port 0: P308 [Direction Mode] = 0 “Unipolar” • Set selection Port 0: P545 [Spd Ref A Sel] = Port 0: P260 [Anlg In0 Value] • Adjust scaling Port 0: P261 [Anlg In0 Hi] = 10V Port 0: P262 [Anlg In0 Lo] = 0V Port 0: P547 [Spd Ref A AnlgHi] = 60 Hz Port 0: P548 [Spd Ref A AnlgLo] = 0 Hz • View results Port 0: P260 [Anlg In0 Value] Port 0: P592 [Selected Spd Ref]
Analog Input Bipolar Speed Reference ±10V Input	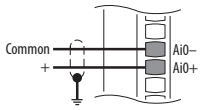 753 Main Control Board TB1 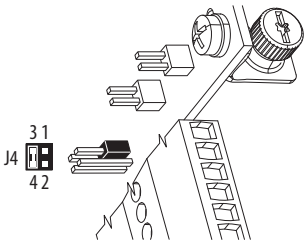	• Set direction mode Port 0: P308 [Direction Mode] = 1 “Bipolar” • Set selection Port 0: P545 [Spd Ref A Sel] = Port 0: P260 [Anlg In0 Value] • Adjust scaling Port 0: P261 [Anlg In0 Hi] = +10V Port 0: P262 [Anlg In0 Lo] = -10V Port 0: P547 [Spd Ref A AnlgHi] = +60 Hz Port 0: P548 [Spd Ref A AnlgLo] = -60 Hz • View results Port 0: P260 [Anlg In0 Value] Port 0: P592 [Selected Spd Ref]
Analog Voltage Input Unipolar Speed Reference 0…+10V Input	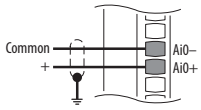 753 Main Control Board TB1 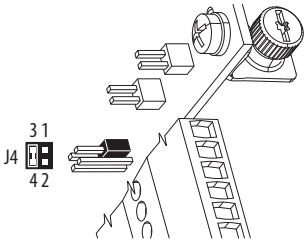	• Set direction mode Port 0: P308 [Direction Mode] = 0 “Unipolar” • Set selection Port 0: P545 [Spd Ref A Sel] = Port 0: P260 [Anlg In0 Value] • Adjust scaling Port 0: P261 [Anlg In0 Hi] = 10V Port 0: P262 [Anlg In0 Lo] = 0V Port 0: P547 [Spd Ref A AnlgHi] = 60 Hz Port 0: P548 [Spd Ref A AnlgLo] = 0 Hz • View results Port 0: P260 [Anlg In0 Value] Port 0: P592 [Selected Spd Ref]

Table 73 - PowerFlex 753 Main Control I/O Board Wiring Examples (Continued)

Input/Output	Connection Example	Required Parameter Changes
Analog Current Input Unipolar Speed Reference 0…20 mA Input	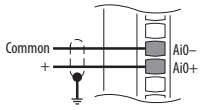 753 Main Control Board TB1 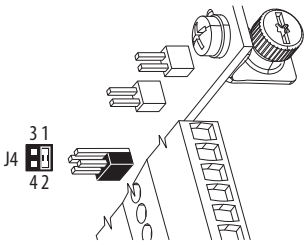	• Set direction mode Port 0: P308 [Direction Mode] = 0 “Unipolar” • Set selection Port 0: P545 [Spd Ref A Sel] = Port 0: P260 [Anlg In0 Value] • Adjust scaling Port 0: P261 [Anlg In0 Hi] = 20 mA Port 0: P262 [Anlg In0 Lo] = 0 mA Port 0: P547 [Spd Ref A AnlgHi] = 60 Hz Port 0: P548 [Spd Ref A AnlgLo] = 0 Hz • View results Port 0: P260 [Anlg In0 Value] Port 0: P592 [Selected Spd Ref]
HW Input PTC Standard = No design standard PTC Nominal = 1.8 kΩ PTC Trip = 3.1 kΩ PTC Reset = 2.2 kΩ Short Circuit Trip – No fault	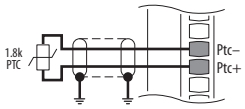 753 Main Control Board TB1	• Configuration Port 0: P250 [PTC Cfg] = 0 “Ignore,” 1 “Alarm,” 2 “Flt Minor,” 3 “FltCoastStop,” 4 “Flt RampStop,” or 5 “Flt CL Stop” • View results Port 0: P251 [PTC Status]

ATTENTION: To avoid an electric shock hazard, the connection of the motor temperature sensor requires double or reinforced insulation between motor live parts and the PTC.

Analog Voltage Output ±10V, 0…20 mA Bipolar +10V Unipolar	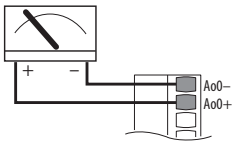 753 Main Control Board TB1	• Configuration Port 0: P270 [Anlg Out Type], bit 0 = 0 • Set selection Port 0: P275 [Anlg Out0 Sel] = Port 0: P3 [Mtr Vel Fdbk] • Adjust scaling Port 0: P278 [Anlg Out0 DataHi] = 60 Hz Port 0: P279 [Anlg Out0 DataLo] = 0 Hz Port 0: P280 [Anlg Out0 Hi] =10V/20 mA Port 0: P281 [Anlg Out0 Lo] = 0V/0 mA • View results Port 0: P277 [Anlg Out0 Data] Port 0: P282 [Anlg Out0 Val]
2-Wire Control Non-reversing 24V DC internal supply	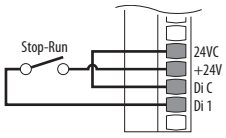 753 Main Control Board TB1	• Set direction mode Port 0: P308 [Direction Mode] = 2 “Rev Disable” • Set selection Port 0: P163 [DI Run] = Port 0: P220 [Digital In Sts], bit 1 = Digital In 1 • View results Port 0: P220 [Digital In Sts] Port 0: P935 [Drive Status 1]
2-Wire Control Reversing External 24V supply	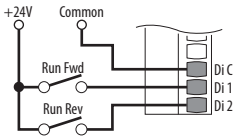 753 Main Control Board TB1	• Set direction mode Port 0: P308 [Direction Mode] = 0 “Unipolar” • Set selection Port 0: P164 [DI Run Forward] = Port 0: P220 [Digital In Sts], bit 1 = Digital In 1 Port 0: P165 [DI Run Reverse] = Port 0: P220 [Digital In Sts], bit 2 = Digital In 2 • View results Port 0: P220 [Digital In Sts] Port 0: P935 [Drive Status 1]

Table 73 - PowerFlex 753 Main Control I/O Board Wiring Examples (Continued)

Input/Output	Connection Example	Required Parameter Changes
3-Wire Control Internal supply	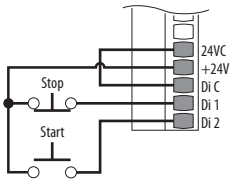 753 Main Control Board TB1	• Set selection Port 0: P158 [DI Stop] = Port 0: P220 [Digital In Sts], bit 1 = Digital In 1 Port 0: P161 [DI Start] = Port 0: P220 [Digital In Sts], bit 2 = Digital In 2 • View results Port 0: P220 [Digital In Sts] Port 0: P935 [Drive Status 1]
3-Wire Control External 24V supply	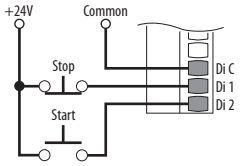 753 Main Control Board TB1	• Set selection Port 0: P158 [DI Stop] = Port 0: P220 [Digital In Sts], bit 1 = Digital In 1 Port 0: P161 [DI Start] = Port 0: P220 [Digital In Sts], bit 2 = Digital In 2 • View results Port 0: P220 [Digital In Sts] Port 0: P935 [Drive Status 1]
Digital Input PLC Output Module	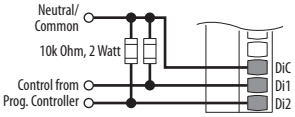 753 Main Control Board TB1	• Set selection Port 0: P158 [DI Stop] = Port 0: P220 [Digital In Sts], bit 1 = Digital In 1 Port 0: P161 [DI Start] = Port 0: P220 [Digital In Sts], bit 2 = Digital In 2 • View results Port 0: P220 [Digital In Sts] Port 0: P935 [Drive Status 1]
Digital Output Internal supply	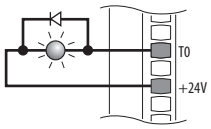 753 Main Control Board TB1	• Set selection Port 0: P240 [T00 Sel] = Port 0: P935 [Drive Status 1], bit 7 = Faulted • View results Port 0: P225 [Dig Out Sts]
Digital Output External supply	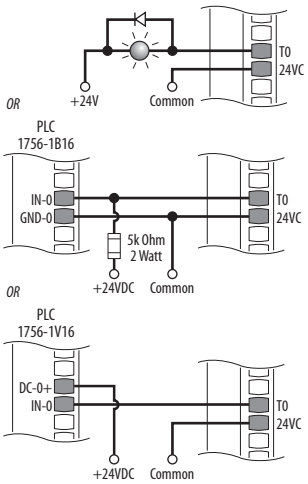 PLC TB 753 TB1	When T0 is On, IN-0 is Off.

Drive Device Ports

Connectors, embedded devices, and installed option modules such as I/O, communication adapters, and DeviceLogix™ options, have unique port number assignments. Connectors and embedded devices have fixed port numbers that cannot be changed. Option modules are assigned a port number when installed.

Figure 138 - Drive Device Ports

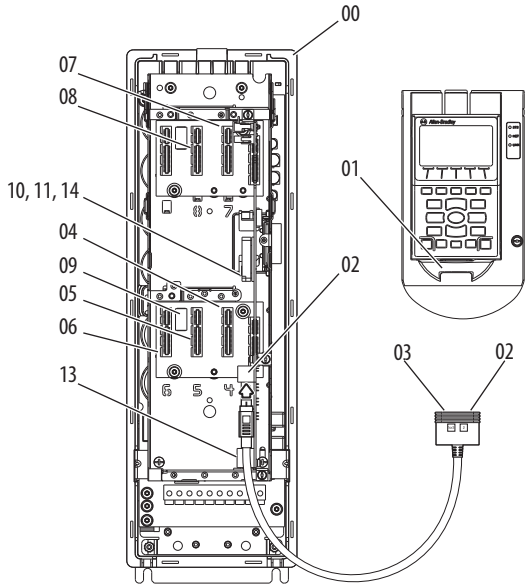

Port	Device	Description
00	Host drive	Fixed port for the drive.
01	HIM	Fixed port at HIM cradle connector. Splitter cable connector provides Port 01 when HIM cradle connector is unused.
02	DPI port	Handheld or remote HIM connection. Splitter cable connection.
03	Splitter cable	Connects to DPI port 02. Provides Port 02 and Port 03.
04…08	Option modules	Available ports for option modules. See the PowerFlex 750-Series I/O, Feedback, and Power Option Modules Installation Instructions, publication 750-IN111, for port recommendations for each option module. **IMPORTANT:** Ports 07 and 08 are available on PowerFlex 755 Frame 2 drives and larger only. PowerFlex 755 Frame 1 drives and 753 drives do not support ports 07 and 08.
09	Auxiliary power supply option module	Designated port for the auxiliary power supply when connected via cable. (PowerFlex 755 Frame 1 and 753 drives only.)
10	Inverter	Fixed port for inverter (PowerFlex 755 Frame 8 drives and larger only).
11	Converter	Fixed port for converter (PowerFlex 755 Frame 8 drives and larger only).
12	Reserved for future use.	
13	EtherNet/IP	Fixed port for embedded EtherNet/IP (PowerFlex 755 drives only).
14	DeviceLogix	Fixed port for embedded DeviceLogix.

Option Module Wiring

For drive compatibility, jumper settings, terminal designations, wiring examples for analog and digital I/O, feedback, and auxiliary power options option modules, see the PowerFlex 750-Series I/O, Feedback, and Power Option Modules Installation Instructions, publication 750-IN111.

Safe Torque Off Option Module

The Safe Torque Off option module is just one component in a safety control system. Components in the system must be chosen and applied appropriately to achieve the desired level of operational safety. For detailed information on this option, see the PowerFlex 750-Series Safe Torque Off User Manual, publication 750-UM002.

Integrated Safety - Safe Torque Off Option Module

The Integrated Safety - Safe Torque Off option module is just one component in a safety control system. Components in the system must be chosen and applied appropriately to achieve the desired level of operational safety. For detailed information on this option, see the PowerFlex 755 Integrated Safety - Torque Off User Manual, publication 750-UM004.

Safe Speed Monitor Option Module

The Safe Speed Monitor option module is just one component in a safety control system. Components in the system must be chosen and applied appropriately to achieve the desired level of operational safety. For detailed information on this option, see the Safe Speed Monitor Option Module for PowerFlex 750-Series AC Drives Safety Reference Manual, publication 750-RM001.

DeviceNet Option Module

For complete information on the DeviceNet option module (20-750-DNET), see the PowerFlex 750-Series Drive DeviceNet Option Module User Manual, publication 750COM-UM002.

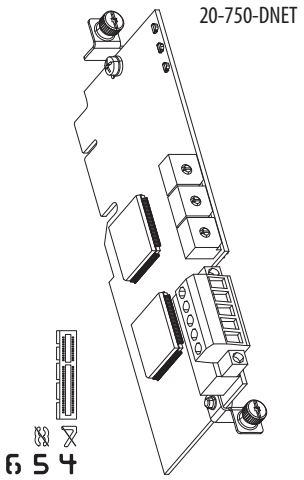

Table 74 - DeviceNet Option Module Status Indicator Indication

	Status Indicator	Name	Description
1	1	PORT	DPI Connection Status
2	2	MOD	Option Module Status
3	3	NET A	DeviceNet Status

Table 75 - DeviceNet Option Module Rotary Switches

	Switch	Name	Description
1	1	Data Rate Switch	Sets the DeviceNet data rate at which the option module communicates.
2	2	Node Address Switches	Sets the node address of the option module.

Table 76 - TB1 Terminal Designations

	Terminal	Color	Signal	Function
5	5	Red	V+	Power Supply
4	4	White	CAN_H	Signal High
3	3	Bare	SHIELD	Shield
2	2	Blue	CAN_L	Signal Low
1	1	Black	V-	Common

ControlNet Option Module

For complete information on the ControlNet option module, see the PowerFlex 20-750-CNETC Coaxial ControlNet Option Module User Manual, publication 750COM-UM003.

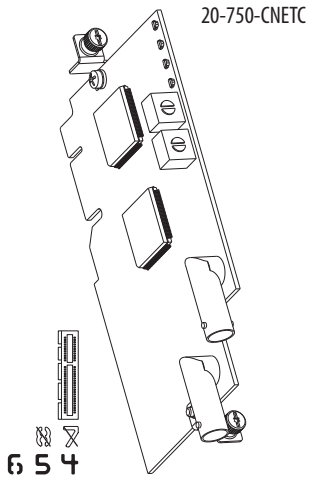

Table 77 - ControlNet Option Module Status Indicator Indication

	Status Indicator	Name	Description
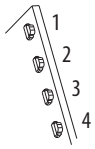	1	PORT	DPI Connection Status
	2	MOD	Option Module Status
	3	NET A	ControlNet Channel A Status
	4	NET B	ControlNet Channel B Status

Table 78 - ControlNet Option Module Rotary Switches

	Switch	Name	Description
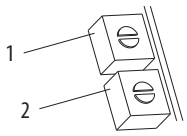	1	TENS Switch	Sets the node address of the option module.
	2	ONES Switch	

Table 79 - Coax Receptacles

	Receptacle	Name	Description
	1	Channel A	Channel A BNC connection to the network.
	2	Channel B	Channel B (redundant) BNC connection to the network.

Dual-port EtherNet/IP Option Module

For complete information on the Dual-Port EtherNet/IP option module, see the PowerFlex 20-750-ENETR Dual-port EtherNet/IP Option Module User Manual, publication 750COM-UM008.

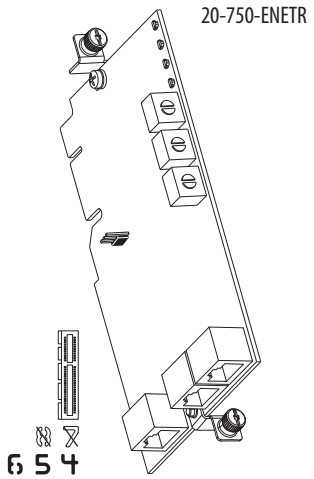

Table 80 - EtherNet/IP Option Module Status Indicator Indication

	Status Indicator	Name	Description
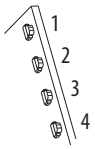	1	PORT	DPI Connection Status
	2	MOD	Option Module Status
	3	NET A	Network Port 1 Status
	4	NET B	Network Port 2 Status

Table 81 - EtherNet/IP Option Module Rotary Switches

	Switch	Name	Description
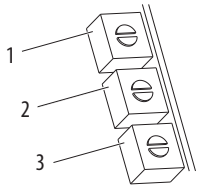	1	HUNDREDS Switch	Sets the node address of the option module.
	2	TENS Switch	
	3	ONES Switch	

Table 82 - J4 Jumper

Adapter Mode	Tap Mode

Table 83 - Ethernet Connectors

	Connector	Name	Description
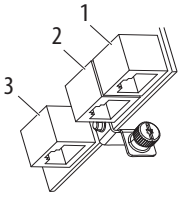	1	ENET1	Ethernet RJ45 connection to the network.
	2	ENET2	
	3	ENET3 (DEVICE)	Connection for the short Ethernet cable (provided with option module) to the Ethernet port on the PowerFlex 755 drive embedded EtherNet/IP adapter. This connector is used only for integrated motion on the EtherNet/IP network data transfer.

PROFIBUS Option Module

For complete information on the PROFIBUS option module, see the PowerFlex 20-750-PBUS PROFIBUS DPV1 Option Module User Manual, publication 750COM-UM004.

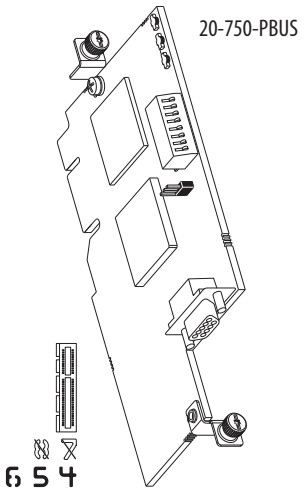

Table 84 - PROFIBUS Option Module Status Indicator Indication

	Status Indicator	Name	Description
	1	PORT	DPI Connection Status
	2	MOD	Option Module Status
	3	NET A	ControlNet Channel A Status

Table 85 - PROFIBUS Option Module Node Address Switches

	Switch	Name	Description
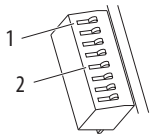	1	Endianness Selection Switch (Switch 8)	Sets endianness of data that are transmitted over network.
	2	Node Address Switches (Switches 1…7)	Sets the node address of the option module.

Table 86 - PROFIBUS Option Module Selection Jumper

PROFIBUS Mode	Profidrive Mode (1)
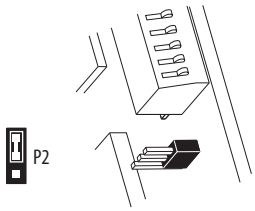	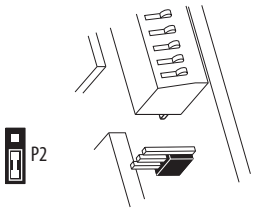

(1) Profidrive Mode is not yet supported. Changing the jumper position has no effect. PROFIBUS is selected in both positions.

Table 87 - Network Connector

	Name	Description
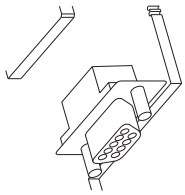	PROFIBUS DB9 Female Connector	PROFIBUS connection to the network.

BACnet/IP Option Module

For complete information on the BACnet/IP option module, see the PowerFlex 20-750-BNETIP BACnet/IP Option Module User Manual, publication 750COM-UM005.

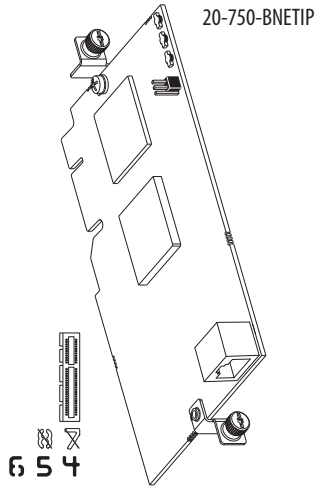

Table 88 - BACnet/IP Option Module Status Indicator Indication

	Status Indicator	Name	Description
	1	PORT	DPI Connection Status
	2	MOD	Option Module Status
	3	NET A	BACnet Status

Table 89 - P4 Address Selection Jumper

Jumper Position	Description
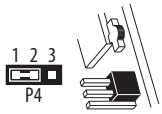	Default network address.
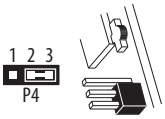	Configured network address.

Table 90 - Ethernet Connector

	Name	Description
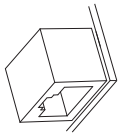	Ethernet RJ45 Connector	BACnet/IP connection to the Ethernet network.

20-COMM Carrier

Enables use of some 20-COMM adapters with PowerFlex 750-Series drives. See Table 91.

See publication 750COM-IN001 for instructions on how to install a 20-COMM adapter on the 20-COMM Carrier.

Frame 1

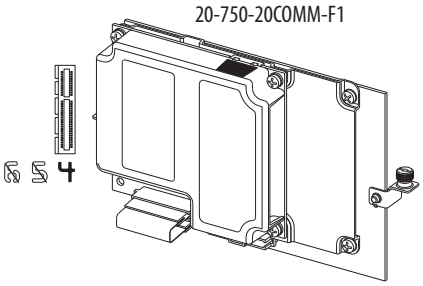

Frames 2 and Larger

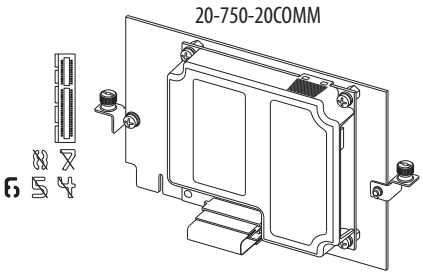

Table 91 - 20-COMM-*x* Network Adapter Compatibility with 750-Series Drives

Adapter		Accesses Ports 0…6 for I/O Connections (Implicit and Explicit Messaging)	Accesses Ports 7 and Higher (I/O, Explicit Messaging)	Supports Drive Add-on Profiles	Supports Asian Languages (6)
Cat. No.	Type				
20-COMM-B	BACnet MS/TP	Not Compatible			
20-COMM-C	ControlNet (Coax)	v3.001 (4)	v3.001 (4)	(5)	v3.001 (4)
20-COMM-D	DeviceNet	(2)	Not Compatible		
20-COMM-E	EtherNet/IP	v4.001 (4)	v4.001 (4)	(5)	v4.001 (4)
20-COMM-H	RS-485 HVAC	v2.009 (3) (4)	Not Compatible		
20-COMM-K	CANopen	v1.001 (4)			
20-COMM-L	LonWorks	v1.007 (4)			
20-COMM-M	Modbus/TCP	v2.001 (4)	v2.001 (4)	Not Compatible	v2.001 (4)
20-COMM-P	PROFIBUS DP	v1.006 (4)	v1.006 (4)		Not Compatible
20-COMM-Q	ControlNet (Fiber)	v3.001 (4)	v3.001 (4)	(5)	v3.001 (4)
20-COMM-R (1)	Remote I/O	(2)	Not Compatible		
20-COMM-S	RS-485 DF1	(2)			

(1) This item is discontinued.
(2) Controller must be able to read/write 32-bit floating point (REAL) values.
(3) Supports all three modes of operation (RTU, P1, N2).
(4) Requires this adapter firmware revision or higher.
(5) Requires firmware revision 1.05 or higher of the drive Add-on Profiles for RSLogix 5000® version v16 or higher.
(6) Chinese, Japanese, and Korean languages are supported at the time of publication.

Frame 1 Drives Installation Recommendations

PowerFlex Frame 1 drives require the use of the communication carrier card kit, catalog number 20-750-20COMM-F1. This kit contains the required adapter plate.

Only install the communication carrier card kit in Port 4. See page 253 for port locations. Port 5 is not accessible when this module is installed.

Frame 2 and Larger Drives Installation Recommendations

We recommend that you install the 20-750-20COMM Communication Carrier in Port 6. Installing the communication carrier in Port 4 or Port 5 makes the adjacent left port inaccessible to other option modules, and can interfere with network cable connections.

Motor Power Cables

For detailed information on Kinetix® 2090 flying-lead motor cables, see the Kinetix Rotary and Linear Motion Cable Specifications Technical Data, publication KNX-TD004.

Motor Feedback Wiring Examples

For motor feedback wiring examples, see the PowerFlex 750-Series I/O, Feedback, and Power Option Modules Installation Instructions, publication 750-IN111.

Control Pod Cable Routing

This section provides details for routing the control pod cable.

Floor Mount Frames 8…10

Supports, clips, and cable ties are provided to help route cabling inside the control pod.

IMPORTANT
- When routing cabling into the control POD, do not block the cooling fan outlet.
- Do not ground shield wires to the inner sheet metal bucket that supports the option modules.

Figure 139 - Control POD Detail

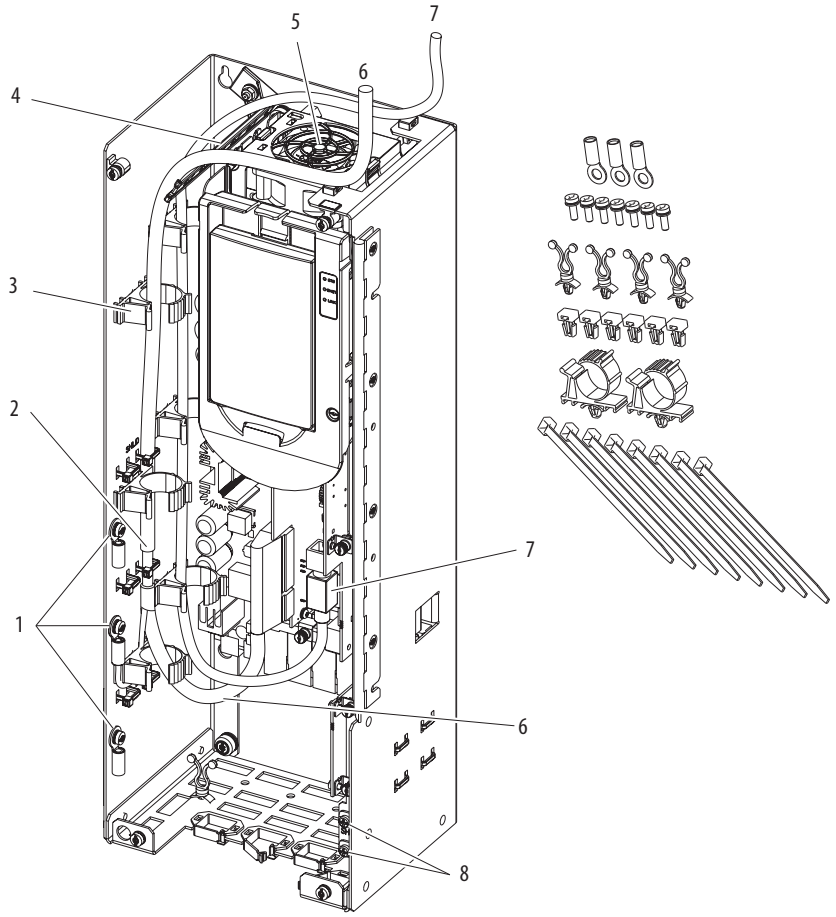

No.	Description
1	I/O Signal shield termination points. Use M4 screws and ring terminals that are provided to tie together and terminate drain wires and shields.
2	Ground shield wires to outer sheet metal bucket. Strip cable insulation 25 mm (1 in.) to expose braid. Attach cable ties around shield and through slots. Pull tight.
3	Attachment points for cable management devices provided (six places).
4	Cable support ladder.

No.	Description
5	Fan outlet. Keep clear to help maintain proper cooling.
6	Control cable entry and routing.
7	Human Interface Module (HIM) cable entry and routing.
8	Shield termination points.

Control Wiring – Early Frame 8 Drives with Cabinet Options

Control terminal block TB2 is mounted on the inside right panel of the cabinet options bay on early production frame 8 drives. TB1 referenced in Figure 140 resides on the main control board. See page 237.

Table 92 - TB2 Terminal Block Specifications

Name	Wire Size Range mm^2 (AWG)		Torque N•m (lb•in)		Strip Length mm (in.)
	Max	Min	Max	Recommended	
Control Terminal Block TB2	4.0 (12)	0.5 (20)	0.5 (4.5)	0.4 (3.5)	8 (0.32)

Figure 140 - Control Terminal Block TB2 - Floor Mount Frame 8 Drives

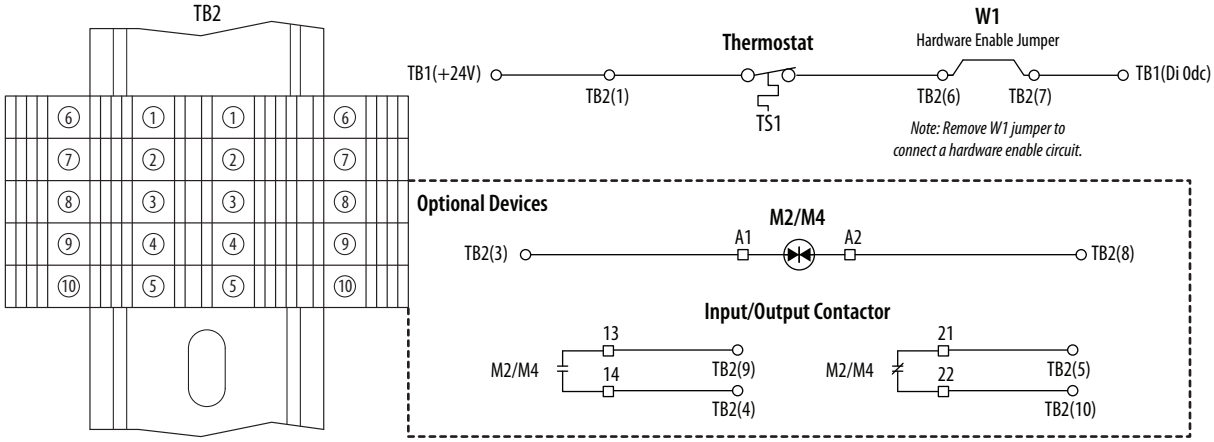

Table 93 - Input/Output Contactor Data

Cat. No. (1)	Input	Pick-up	Hold-in
100-D420EA11	50 Hz	490VA	18VA
100-D420ED11	60 Hz	490VA	18VA
100-D630EA11	50 Hz	1915VA	33VA
100-D630ED11	60 Hz	1915VA	33VA
100-D860EA11	50 Hz	1915VA	33VA
100-D860ED11	60 Hz	1915VA	33VA
100-G1200KD12	60 Hz	2,400VA	70VA

(1) For full contactor specifications, see publications 100D-SG001 and 100G-SG001.

Figure 141 - Frame 8 Cabinet Options Bay Component Location

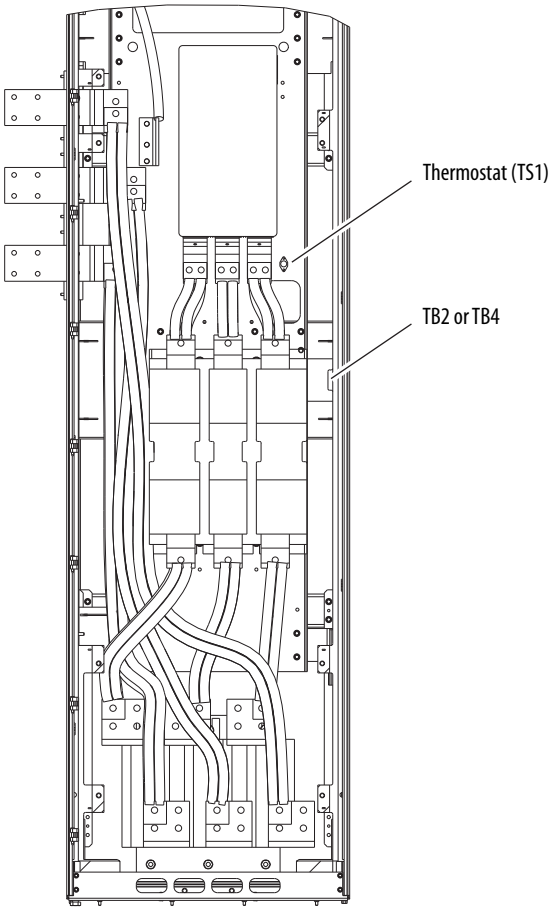

Control Wiring – Current Frame 8 Drives with Cabinet Options

Frame 8 drives are shipped from the factory with control power set to 120V AC. To change control voltage to 230V AC, move the jumper as shown.

Table 94 - Control Power for Customer Use Voltage Selection – Floor Mount Frame 8 Drives

120V AC, 60 Hz, 4.2 A (Factory Setting)	230V AC, 50 Hz, 2.2 A
TB4(7) — FU12 — TB3(H) 600V AC, 3A, Class CC	TB4(6) — FU12 — TB3(H) 600V AC, 6A, Class CC

Control terminal block TB4 is mounted on the inside right panel of the cabinet options bay in current production drives. TB1 referenced in Figure 142 resides on the main control board. See Floor Mount Frames 8...10 on page 237.

Table 95 - TB4 Terminal Block Specifications

Name	Wire Size Range mm² (AWG)		Torque N•m (lb•in)		Strip Length mm (in.)
	Max	Min	Max	Recommended	
Control Terminal Block TB3	4.0 (12)	0.2 (24)	0.5 (4.5)	0.4 (3.5)	7 (0.28)
Control Terminal Block TB4	4.0 (12)	0.5 (20)	0.5 (4.5)	0.4 (3.5)	8 (0.32)

Figure 142 - Control Terminal Blocks TB3 and TB4 – Floor Mount Frame 8 Drives

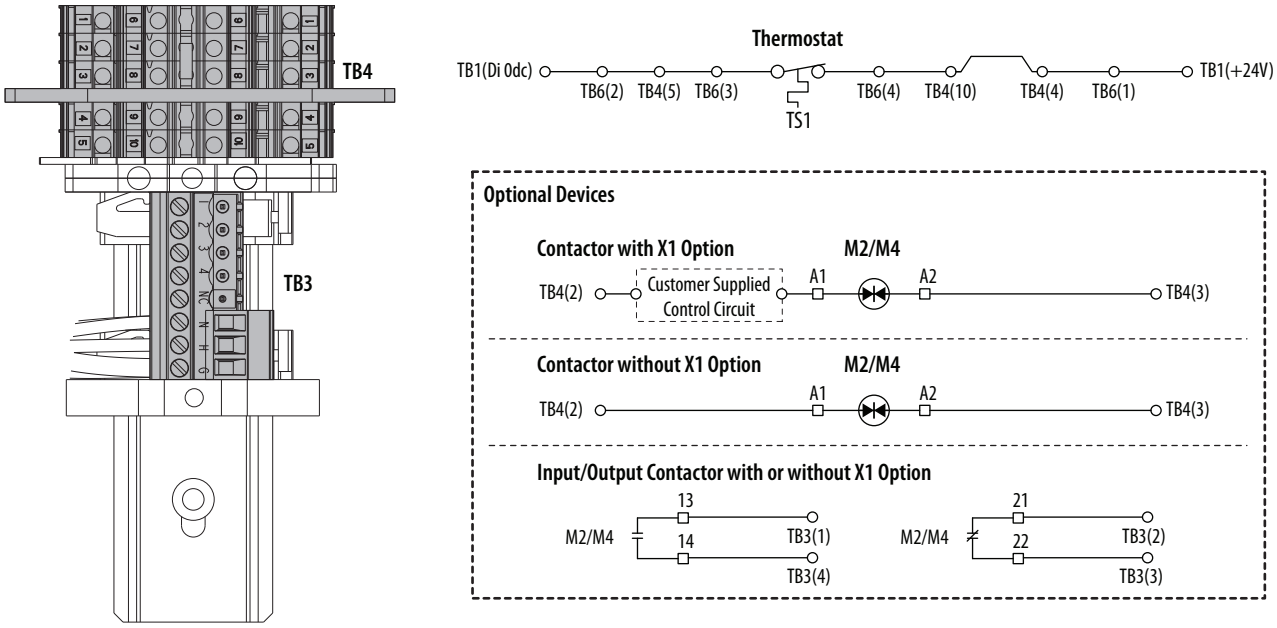

Control Wiring – Frame 9 and 10 Drives with Cabinet Options

Frame 9 drives are shipped from the factory with control power set to 120V AC. To change control voltage to 230V AC, move the jumper as shown.

Table 96 - Control Power for Customer Use Voltage Selection – Floor Mount Frames 9 and 10 Drives

120V AC, 60 Hz, 4.2 A (Factory Setting)	230V AC, 50 Hz, 2.2 A
T1 (X2) — FU12 — TB3(H) 600V AC, 3A, Class CC	TB4(6) — FU12 — TB3(H) 600V AC, 6A, Class CC

Control terminal block TB4 is mounted on the power option module. TB1 referenced in Figure 143 resides on the main control board. See Floor Mount Frames 8...10 on page 237.

Figure 143 - Control Terminal Blocks TB3 and TB4 – Floor Mount Frames 9 and 10 Drives

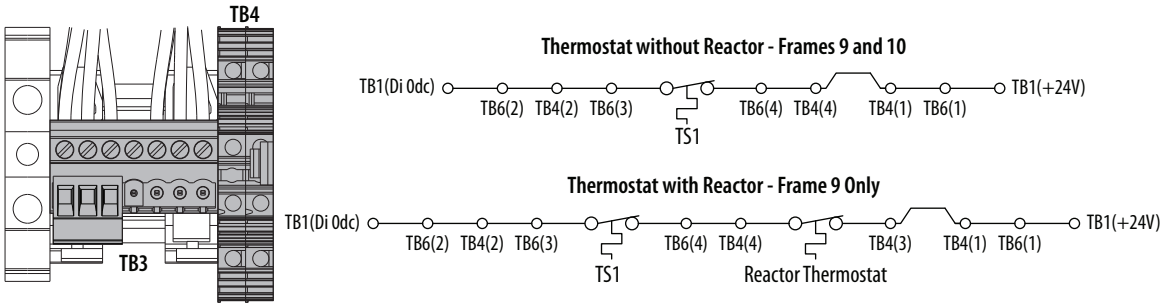

Figure 144 - Floor Mount Frame 9 Cabinet Options Bay Component Location

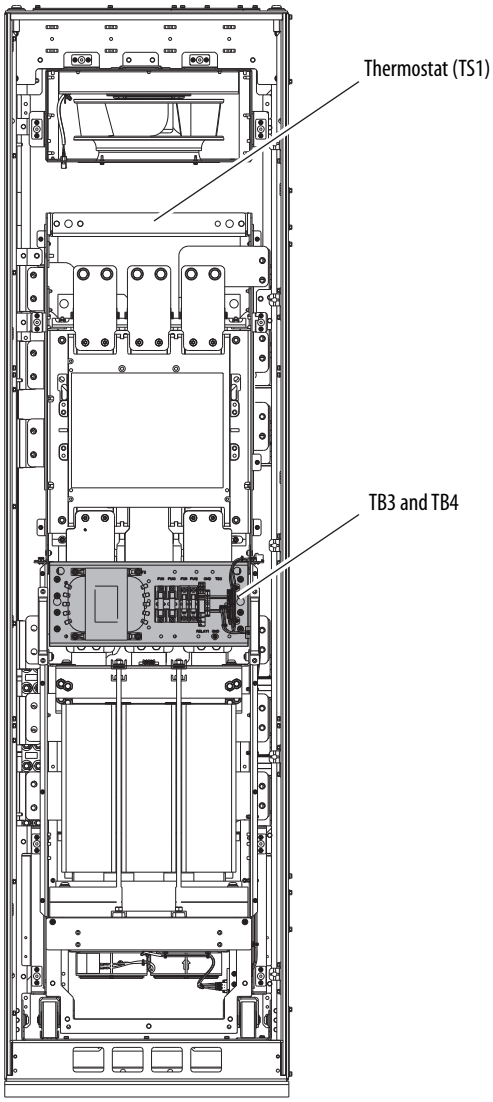

Enclosure Options – Floor Mount Frames 8…10

NEMA/UL Type 1 Enclosure – 2500 MCC Style Cabinet

The enclosure that is provided is a NEMA/UL Type 1 – 2500 MCC style cabinet that is 600 mm or 800 mm deep (Position 6, Code B, L, P, or W). Type 1 enclosures are intended for indoor use primarily to provide a degree of protection against limited amounts of falling dirt. Doors and openings are sealed by a gasket. One of these options in the catalog number indicates NEMA/UL Type 1 enclosures – 2500 MCC style cabinet:

- Position 6, Code B = 600 mm deep enclosure
- Position 6, Code L = 800 mm deep enclosure
- Position 6, Code P = 800 mm deep enclosure with MCC bus installed; standard cabinet color (RAL 7032)
- Position 6, Code W = 800 mm deep enclosure with MCC bus installed; Centerline 2100 gray color (ASA49)

NEMA Type 12 Enclosure – 2500 MCC Style Cabinet

The enclosure that is provided is a NEMA Type 12 – 2500 MCC style cabinet that is 800 mm deep (Position 6, Code J, K, or Y). Type 12 enclosures are intended for indoor use primarily to provide a degree of protection against dust, falling dirt, and dripping noncorrosive liquids. One of these options in the catalog number indicates NEMA Type 12 enclosure – 2500 MCC style cabinet:

- Position 6, Code J = 800 mm deep enclosure
- Position 6, Code K = 800 mm deep enclosure with MCC bus installed; standard cabinet color (RAL 7032)
- Position 6, Code Y = 800 mm deep enclosure with MCC bus installed; Centerline 2100 gray color (ASA49)

Before performing any work on the drive, read the general precautions that begin on page 15.

Integrated Motion Drives

Configure Option Modules for Integrated Motion

PowerFlex® 755 drives can be used as part of an Integrated Motion system. Integrated Motion supports the following option module combinations.

Table 97 - Two Feedback Options and I/O

Supported Module	Cat. No.	Valid Ports
Single Incremental Encoder	20-750-ENC-1	4…8
Dual Incremental Encoder	20-750-DENC-1	4…8
Universal Feedback	20-750-UFB-1	4…6
11-Series I/O	20-750-1132C-2R, 20-750-1133C-1R2T, 20-750-1132D-2R	7
22-Series I/O	20-750-2262C-2R, 20-750-2263C-1R2T, 20-750-2262D-2R,	7

Table 98 - Two Feedback Options, One Safe Torque Off Option, and I/O

Supported Module	Cat. No.	Valid Ports
Single Incremental Encoder	20-750-ENC-1	4 and 5
Dual Incremental Encoder	20-750-DENC-1	4 and 5
Universal Feedback	20-750-UFB-1	4 and 5
Safe Torque Off	20-750-S	6
11-Series I/O	20-750-1132C-2R, 20-750-1133C-1R2T, 20-750-1132D-2R	7
22-Series I/O	20-750-2262C-2R, 20-750-2263C-1R2T, 20-750-2262D-2R	7

Table 99 - Two Feedback Options, One Safe Speed Monitor Option, and I/O

Supported Module	Cat. No.	Valid Ports
Single Incremental Encoder	20-750-ENC-1	4 and 5
Dual Incremental Encoder	20-750-DENC-1	4 and 5
Universal Feedback	20-750-UFB-1	4 and 5
Safe Speed Monitor	20-750-S1	6
11-Series I/O	20-750-1132C-2R, 20-750-1133C-1R2T, 20-750-1132D-2R	7
22-Series I/O	20-750-2262C-2R, 20-750-2263C-1R2T, 20-750-2262D-2R	7

Supporting Documentation

For detailed information for how to configure PowerFlex 755 drives for use with a ControlLogix® L6x or L7x controller, see these publications.

Publication
Integrated Motion on the EtherNet/IP™ network: Configuration and Startup User Manual, publication MOTION-UM003
Logix5000™ Controllers Motion Instructions Reference Manual, publication MOTION-RM002
Integrated Motion on the EtherNet/IP network Reference Manual, publication MOTION-RM003

Numerics

120V output wiring 245
20-COMM adapters 260
21G options
additional selections 16, 17
required selections 16, 17
2500 MCC style cabinet
NEMA Type 12 268
NEMA/UL Type 1 268

A

AC input power terminals
wall mount frames 1...7 159
AC line input
circuit breakers 175
fuses 175
airflow 36
auxiliary braking method 200

B

BACnet/IP option module 259
barrel lugs 171
bipolar input sources 227
blower assembly 48
braking method 200
bus bar and AC power rail locations
DC input, floor mount drives 165
bus bar locations
AC input, frames 8...10 164
floor mount frame 8 option P14 wiring bay 166
floor mount frame 9 cabinet options bay 167
bus bars
connections on extruded bus bars 167

C

cabinet options
contactors 202
power disconnects 201
reactors 202
terminal block 202
thermostat control 202
transformer panel
fuses 203
thermostat 203
cabinet options bay 49
cabinet options bay accessories 208
cable
acceptable for drive installations 155
control pod 262
for motor 261
routing options
floor mount drives, frame 8...10 169
shield 154
catalog number explanation 15, 16, 17
CE conformity
EMC Directive 22, 24
EN 60269-1 - fusing 176
EN 61000-6-3 - EMC 26, 27
EN 61000-6-4 - EMC 26, 27
EN 61800-3 - EMC 22, 26, 27
EN 61800-5-1 - EMC 22
Low Voltage Directive 22, 23
circuit breakers 175
IEC 176
instantaneous trip 176
UL 176
common mode capacitors 219
conductors
multiple in parallel 172
multiple per phase 172
contactors 202
bypass contactor 201
input contactor 200
output contactor 201
control pod 229
cable 262
wiring connections 127
control transformer voltage settings 247
control wiring
frame 8 drives
current production drives 265
early production drives 263
frame 9 and 10 drives with cabinet options 266
ControlNet option module 256
cycling power disconnect switches 201

D

DC input terminal
descriptions
wall mount frames 5...7 163
locations
wall mount frames 5 161
wall mount frames 6 and 7 162
DC link fuses 175
DC precharge board 244
debris screen 48
device ports 253
DeviceNet option module 255
dimensions index
floor mount drives with cabinet options 88
wall and floor mount drives 57
door
interlock solenoid 244
switch 244
dual-port EtherNet/IP option module 257
dynamic braking 16, 17

E

earthing system
TN or TT 25
EMI clamp 154

enclosure options
floor mount frames 8..10 268
exhaust hood 48
extruded bus bars 167

F

fiber-optic cables 127
fiber-optic interface board 241
P13 terminal designations 241
P14 terminal designations 242
filtering and CM cap configuration 16, 17
fuse types
IEC 176
UL 176
fuses
AC line input 175
DC link 175

G

ground
conductor 153
connections, redundant 154
for the motor cable shield 154
impedance 153
PE 153
RFI filter 154
scheme 153
grounding stud
wall mount frames 1...7 156

H

hardware ENABLE jumper 238
hardware ENABLE jumper location
PowerFlex 753 drive 239
PowerFlex 755 drive
floor mount frames 8...10 239
wall mount frames 1...7 239

I

I/O terminal block specifications
common DC input drive assembly 228
main control board 228
three-phase drive assembly 228
I/O wire recommendations 228
I/O wiring
CE compliance 227
electrical safety of I/O circuits 227
insulation rating 227
SELV and PELV circuits 227
signal noise 227
use copper wire 227
input power terminals
AC
wall mount frames 1...7 159
DC
wall mount frames 5 161
wall mount frames 5...7 163
wall mount frames 6 and 7 162
input protection devices
400V AC and 540V DC - floor mount frames 8…10 183
400V AC and 540V DC – wall mount frames 1...7 177, 179, 181
480V AC and 650V DC - floor mount frames 8…10 187
480V AC and 650V DC - wall mount frames 1…7 185
600V AC and 810V DC - floor mount frames 8…10 191
600V AC and 810V DC - wall mount frames 3…7 189
690V AC and 932V DC - floor mount frames 8…10 194
690V AC and 932V DC - wall mount frames 6…7 193
instantaneous trip circuit breakers 176
integrated safety - safe torque off option module 254
interlock solenoid 244
IP20, NEMA/UL Type 1
debris screen 48
exhaust hood 48
IP54, NEMA 12 Cabinet
blower assembly 48
exhaust hood 48

J

jumper
default power configurations
floor mount frames 8...10 220
wall mount frames 1...7 220
hardware ENABLE 238, 239
J4 input mode 234
PE-A and PE-B 220
PE-A1, PE-A2, and PE-B 220
recommended power configurations
floor mount frames 8...10 221
wall mount frames 1...7 220
SAFETY enable 240
TB5 settings 246
jumper locations 221
frames 8…10 PE-B common mode jumper 225
PE-A1 MOV and PE-A2 input filter caps jumper 226
wall mount frame 6 223
wall mount frame 7 224
wall mount frames 2…5 222

K

kit catalog numbers
DC bus connection (20-750-BUS1A-F8) 121
DC bus terminals
frame 6 (20-750-DCBB1-F6) 159
frame 7 (20-750-DCBB1-F7) 159
EMC (20-750-EMCx-Fx) 68
EMC plate (20-750-EMCx-Fx) 25
exhaust hood (20-750-HOOD1-F8) 48
flange adapter
frame 6 (20-750-FLNG4-F6) 71

frame 7 (20-750-FLNG4-F7) 74
HIM (20-HIM-C6S) 70
L-brackets (20-750-LBRKT1) 170
NEMA Type 1
frame 6 (20-750-NEMA1-F6) 72
frame 7 (20-750-NEMA1-F7) 75
frames 1...5 (20-750-NEMA1-Fx) 66
NEMA Type 1 (20-750-NEMA1-Fx) 25
roll-out cart (20-750-CART1-F8) 135

L

L-bracket
barrel lugs 171
power terminals
floor mount frames 8...10 170
lift the drive
enclosure code B and L 44
enclosure code F 41
enclosure code G 43
enclosure code J, H, and Y 45
enclosure code N 42
lifting hardware 41
Open Type (removed from cabinet) 43
lifting
equipment types 39

M

main control board
PowerFlex 753 drives 233, 234
J4 input mode jumper 234
TB2 terminal designations 235
TB3 terminal designations 235
PowerFlex 755 drives
floor mount frames 8...10 237, 238
TB1 I/O terminal designations 237
wall mount frames 1...7 236
main control I/O board
wiring examples
PowerFlex 753 drives 250
motor cables 261
motor overload protection 196
mounting clearances
floor mount 36
wall mount 36
mounting hardware 40
MOV 219
multiple conductors
in parallel 172
per phase 172

N

nameplate 18, 21
NEMA Type 12 – 2500 MCC style cabinet 268
NEMA/UL Type 1 – 2500 MCC style cabinet 268

O

option modules
20-COMM adapters 260
BACnet/IP option module 259
ControlNet option module 256
DeviceNet option module 255
dual-port EtherNet/IP option module 257
for integrated motion system 269
integrated safety - safe torque off option module 254
PROFIBUS option module 258
safe speed monitor option module 254
safe torque off option module 254
option P3 or P5 disconnect switch
wiring clearance 168
options bay accessories 208
floor mount frame 8
400V, 50 Hz input - code P12 output contactor data 217
480V, 60 Hz input - code P12 output contactor data 217
600V, 50 Hz input - code P12 output contactor data 218
690V, 60 Hz input - code P12 output contactor data 218
option P3 or P5 disconnect and option P11 input contactor 210
option P3 or P5 disconnect and option P12 output contactor 216
option P3 or P5 disconnect, option P11 input contactor, and option L1 or L3 input reactor 211
option P3 or P5 disconnect, option P11 input contactor, and option L2 or L4 output reactor 212
option P3 or P5 disconnect, option P12 output contactor, and option L2 or L4 output reactor 213
option P3 or P5 disconnect 209
option P3 or P5 disconnect and option L1 or L3 input reactor 214
option P3 or P5 disconnect and option L2 or L4 output reactor 215
output contactor data
400V, 50 Hz input 217
480V, 60 Hz input 217
600V, 50 Hz input 218
690V, 60 Hz input 218
overload protection
motor 196

P

PE grounding stud
wall mount frames 1...7 156
PE, safety ground 153
ports
device 253
power block and termination point locations
wall mount frames 1...5 157
wall mount frames 6 and 7 158
power disconnect options
400V, 50 Hz input

molded case disconnect switch 204
thermal magnetic circuit breaker 204
480V, 60 Hz input
molded case disconnect switch 205
thermal magnetic circuit breaker 205
600V, 50 Hz input
molded case disconnect switch 206
thermal magnetic circuit breaker 206
690V, 60 Hz input
molded case disconnect switch 207
thermal magnetic circuit breaker 207
power disconnects 201
power jumper
locations
wall mount frame 6 223
wall mount frame 7 224
wall mount frames 2. . . 5 222
power terminals
L-bracket
floor mount frames 8...10 170
terminal blocks
frames 1...7 159
power wiring connections
access 124, 133
precharge board 244
PROFIBUS option module 258

R

reactors 202
RF emission compliance
400V/480V input drives 26
600V/690V input drives 27
RFI filter 154
roll-out cart 135
adjust height 137
adjust reach 143
height spacers 138
precautions for use 149
tip-over hazard 147, 149

S

safe speed monitor option module 254
safe torque off option module 254
safety ground
ground point 153
PE 153
SAFETY jumper 240
SAFETY jumper location
PowerFlex 753 drives 240
PowerFlex 755 drives 240
safety option modules
safe speed monitoring 240
safe torque off 240
shield terminal 154
short circuit current ratings
400V AC input 196
480V AC input 197
600V AC input 199
690V AC input 200
actual 196
max 196
shunt trip 243
signal noise 227
storage
atmosphere 37
temperature 37

T

temperature
storage 37
surrounding air 37
terminal block
control wiring
floor mount frame 8 (current drives) 265
floor mount frame 8 (early drives) 263
floor mount frame 9 and 10 266
I/O specifications
common DC input 228
main control board 228
three-phase drive assembly 228
power
wall mount frames 1...5 155
wall mount frames 6 and 7 156
terminal block locations
common DC input
wall mount frames 5 161
wall mount frames 6 and 7 162
power
wall mount frames 1...5 157
wall mount frames 6 and 7 158
thermostat control 202
troubleshooting
start-up difficulties 153

U

uninterruptible power supply 248
UPS 248

W

weights
components 40
drives 39
wire harness
cabinet fan/cabinet blower 132
control and power 131
control power input 132
DC bus 131
digital I/O wiring 132
power output 132
wiring bay 49
wiring examples
main control I/O board
PowerFlex 753 drives 250

Rockwell Automation Support

Use these resources to access support information.

Technical Support Center	Find help with how-to videos, FAQs, chat, user forums, Knowledgebase, and product notification updates.	rok.auto/support
Local Technical Support Phone Numbers	Locate the telephone number for your country.	rok.auto/phonesupport
Technical Documentation Center	Quickly access and download technical specifications, installation instructions, and user manuals.	rok.auto/techdocs
Literature Library	Find installation instructions, manuals, brochures, and technical data publications.	rok.auto/literature
Product Compatibility and Download Center (PCDC)	Download firmware, associated files (such as AOP, EDS, and DTM), and access product release notes.	rok.auto/pcdc

Documentation Feedback

Your comments help us serve your documentation needs better. If you have any suggestions on how to improve our content, complete the form at rok.auto/docfeedback.

Waste Electrical and Electronic Equipment (WEEE)

At the end of life, this equipment should be collected separately from any unsorted municipal waste.

Rockwell Automation maintains current product environmental compliance information on its website at rok.auto/pec.

Allen-Bradley, ControlLogix, DeviceLogix, DPI, Kinetix, PowerFlex, Rockwell Automation, Rockwell Software, RSLogix 5000, and SCANport are trademarks of Rockwell Automation, Inc.
EtherNet/IP is a trademark of ODVA, Inc.
Trademarks not belonging to Rockwell Automation are property of their respective companies.

Rockwell Otomasyon Ticaret A.Ş. Kar Plaza İş Merkezi E Blok Kat:6 34752, İçerenköy, İstanbul, Tel: +90 (216) 5698400 EEE Yönetmeliğine Uygundur

Connect with us.

rockwellautomation.com — expanding **human possibility**®

AMERICAS: Rockwell Automation, 1201 South Second Street, Milwaukee, WI 53204-2496 USA, Tel: (1) 414.382.2000
EUROPE/MIDDLE EAST/AFRICA: Rockwell Automation NV, Pegasus Park, De Kleetlaan 12a, 1831 Diegem, Belgium, Tel: (32) 2663 0600
ASIA PACIFIC: Rockwell Automation SEA Pte Ltd, 2 Corporation Road, #04-05, Main Lobby, Corporation Place, Singapore 618494, Tel: (65) 6510 6608
UNITED KINGDOM: Rockwell Automation Ltd., Pitfield, Kiln Farm, Milton Keynes, MK11 3DR, United Kingdom, Tel: (44)(1908) 838-800

Publication 750-IN001T-EN-P - March 2026
Supersedes Publication 750-IN001S-EN-P - September 2024

Copyright © 2026 Rockwell Automation, Inc. All rights reserved. Printed in the U.S.A.